Milos. Works better.

Product Catalogue 10th Edition

Making riggers lives easier

Version 2.0

Area Four Industries

Contents

Small and Medium trusses 4

Big trusses 22

Junctions 38

Multicubes 56

Bookcorners 62

Xtruss 66

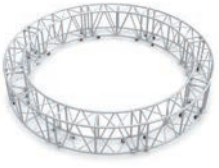

Circles and ellipses 72

Furniture & DJ Kits 76

Truss Accessories 78

Cell clamps 92

Towers & LED screen structures 106

Roofs 128

Rigging accessories & Workwear 156

Crowd barriers 162

Xstages 166

Ramps 186

Connecting the world

Small & Medium trusses

Connecting the world

M100

- Stylish modular Pipe & Drape solution
- Single tube, quick connection construction
- Versatile 'node-cube' with pre-set location positions
- Stand-alone or integrated within truss structures
- Connection kit supplied with every welded tube
- Compatible with 200/400/500/600 series cell clamps
- Compatible with Xtruss accessories
- Powder coat colour finish available on request

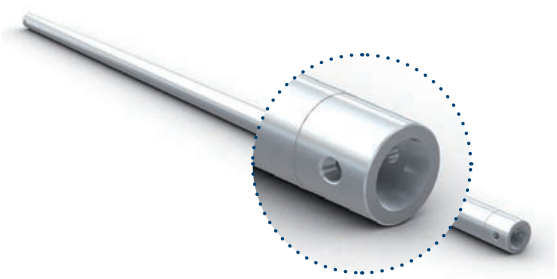

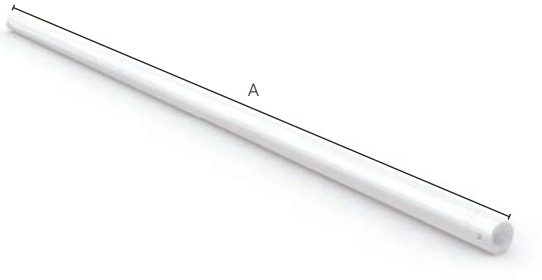

	Main Tubes		Braces		Alloy
M100	50x2mm	2"x0.08"	-	-	EN - AW 6082 T6

STANDARD LENGTHS AND WEIGHTS AVAILABLE

	m	ft	0.50	1.64	1.00	3.28	1.50	4.92	2.00	6.56	2.50	8.20	3.00	9.84
M 100	kg	lbs	0.70	1.67	1.10	2.58	1.50	3.48	1.90	4.39	2.40	5.29	2.80	6.20

Connection material (pins/clips/couplers) and packaging not included in above weights

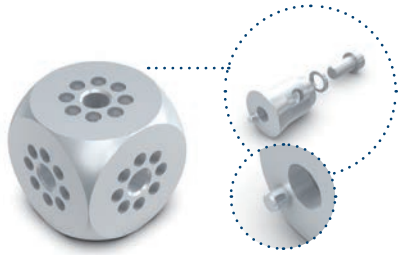

CUBEB-UNI	Universal multiconnection cube that's 360° adjustable
Series	
M100	Weight 0.27 kg (0.60 lbs)

HINGEQB-UNI	Universal hinge
Series	
M100	Weight 0.49 kg (1.08 lbs)

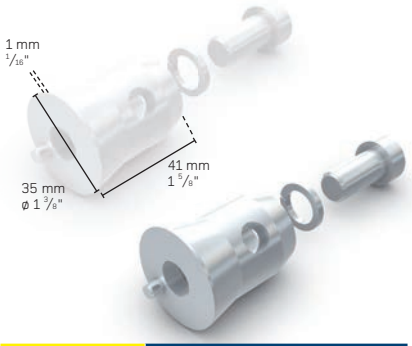

CON63B	Male fitting for CUBEB-UNI, QCB1, equipped with location pin
Series	Supplied with washer and M12x25 bolt. F & U compatible versions available Weight 0.17 kg (0.37 lbs)
M100	

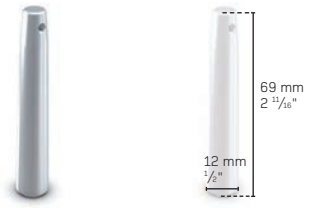

PB	Pin B
Series	
M100	Weight 0.02 kg (0.04 lbs)

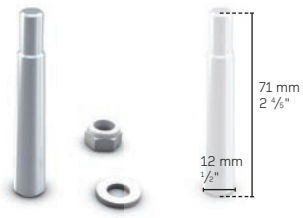

PBM8	Pin B with thread M8
Series	Supplied with washer and nyloc nut. Weight 0.02 kg (0.04 lbs)
M100	

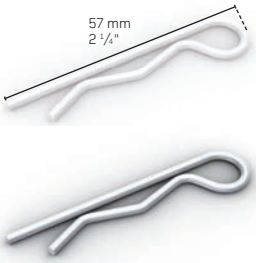

SRPB	Safety R Clip B
Series	
M100	Weight 0.002 kg (0.01 lbs)

CCB	M290B conical connector
Series	F & U compatible versions available. Weight 0.11 kg (0.24 lbs)
M100	

BBPSC	M100 single base plate with half connector
Series	F & U compatible versions available. Weight 0.19 kg (0.42 lbs)
M100	

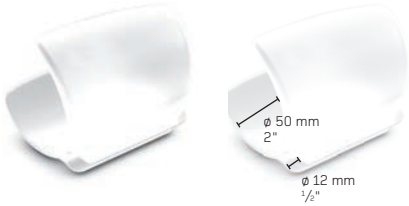

CL50	Clip 50
Series	Banner attachment for tube d = 50 mm (2"). Color: Clear Not compatible with 48 mm (1.89") tubes. Weight 0.03 kg (0.07 lbs)
M100	

Connecting the world

M222

- Compact display series system
- Lightweight, modular construction
- Fast connection for quick, simple and secure assembly
- Impressive free-span characteristics for its size
- Connection kit supplied with every truss length or junction
- Compatible with 100 series cell clamps
- Compatible with Xtruss accessories
- Powder coat colour finish available on request

M222 BTM DUO — LOADING CHART

Span	m	ft	2.00	6.56	3.00	9.84	4.00	13.12	5.00	16.40	6.00	19.69	7.00	22.97	8.00	26.25
point load	kg	lbs	233.00	513.68	172.80	380.96	128.80	283.96	102.20	225.31	84.30	185.85	71.40	157.41	61.70	136.03
deflection	mm	inch	2.10	0.08	5.20	0.20	9.30	0.37	14.60	0.57	21.20	0.83	28.90	1.14	38.00	1.50
two point load	kg	lbs	129.60	285.72	118.00	260.15	96.60	212.97	76.70	169.09	63.30	139.55	53.60	118.17	46.20	101.85
deflection	mm	inch	2.00	0.08	6.10	0.24	11.90	0.47	18.60	0.73	26.80	1.06	36.50	1.44	47.70	1.88
three point load	kg	lbs	86.40	190.48	86.10	189.82	64.40	141.98	51.10	112.66	42.20	93.03	35.70	78.70	30.80	67.90
deflection	mm	inch	1.80	0.07	6.20	0.24	11.10	0.44	17.30	0.68	250.00	0.98	340.00	1.34	44.50	1.75
four point load	kg	lbs	64.80	142.86	64.60	142.42	53.70	118.39	42.60	93.92	35.10	77.38	29.80	65.70	25.70	56.66
deflection	mm	inch	1.80	0.07	5.90	0.23	11.70	0.46	18.30	0.72	26.40	1.04	36.00	1.42	47.10	1.85
distributed load	kg/m	lbs/ft	129.60	87.09	86.10	57.86	64.30	43.21	40.90	27.48	28.10	18.88	20.40	13.71	15.40	10.35
deflection	mm	inch	1.50	0.06	4.90	0.19	11.60	0.46	18.20	0.72	26.20	1.03	35.70	1.41	46.70	1.84

DUO figures are based on use in vertical mode and stabilized every 1m

M222 STM TRIO — LOADING CHART

Span	m	ft	2.00	6.56	3.00	9.84	4.00	13.12	5.00	16.40	6.00	19.69	7.00	22.97	8.00	26.25
point load	kg	lbs	222.00	489.43	148.50	327.39	110.00	242.51	86.60	190.92	70.70	155.87	59.20	130.51	50.30	110.89
deflection	mm	inch	2.00	0.08	4.50	0.18	8.10	0.32	12.70	0.50	18.40	0.72	25.30	1.00	33.40	1.31
two point load	kg	lbs	167.00	368.17	110.00	242.51	82.50	181.88	64.90	143.08	53.00	116.84	44.40	97.89	37.70	83.11
deflection	mm	inch	2.50	0.10	5.70	0.22	10.20	0.40	16.00	0.63	23.10	0.91	31.50	1.24	41.30	1.63
three point load	kg	lbs	112.30	247.58	74.20	163.58	55.00	121.25	43.30	95.46	35.40	78.04	29.60	65.26	25.20	55.56
deflection	mm	inch	2.40	0.09	5.40	0.21	9.50	0.37	14.90	0.59	21.60	0.85	29.50	1.16	38.70	1.52
four point load	kg	lbs	93.60	206.35	61.90	136.47	45.80	100.97	36.10	79.59	29.50	65.04	24.70	54.45	21.00	46.30
deflection	mm	inch	2.50	0.10	5.70	0.22	10.10	0.40	15.80	0.62	22.80	0.90	31.10	1.22	40.80	1.61
distributed load	kg/m	lbs/ft	224.50	150.86	99.00	66.52	55.00	36.96	34.60	23.25	23.60	15.86	16.90	11.36	12.60	8.47
deflection	mm	inch	2.50	0.10	5.60	0.22	10.00	0.39	15.70	0.62	22.60	0.89	30.90	1.22	40.50	1.59

TRIO figures are based on use in apex up/down orientation

M222 QTM QUATRO — LOADING CHART

Span	m	ft	2.00	6.56	3.00	9.84	4.00	13.12	5.00	16.40	6.00	19.69	7.00	22.97	8.00	26.25
point load	kg	lbs	373.00	822.32	290.00	639.34	234.00	515.88	194.00	427.70	163.00	359.35	141.00	310.85	122.20	269.40
deflection	mm	inch	1.70	0.07	4.40	0.17	8.50	0.33	14.00	0.55	20.60	0.81	28.70	1.13	38.10	1.50
two point load	kg	lbs	258.90	570.78	188.00	414.47	156.00	343.92	133.00	293.21	116.00	255.74	101.00	222.67	89.00	196.21
deflection	mm	inch	2.00	0.08	4.90	0.19	9.70	0.38	16.20	0.64	24.70	0.97	34.80	1.37	46.40	1.83
three point load	kg	lbs	172.60	380.52	144.00	317.47	125.00	275.58	101.90	224.65	83.90	184.97	71.00	156.53	61.10	134.70
deflection	mm	inch	1.80	0.07	5.20	0.20	10.70	0.42	17.30	0.68	25.00	0.98	34.10	1.34	44.60	1.76
four point load	kg	lbs	129.50	285.50	119.00	262.35	102.00	224.87	83.00	182.98	69.90	154.10	59.10	130.29	50.90	112.22
deflection	mm	inch	1.80	0.07	5.40	0.21	11.10	0.44	18.00	0.71	26.40	1.04	36.00	1.42	47.10	1.85
distributed load	kg/m	lbs/ft	258.90	173.97	171.90	115.51	128.40	86.28	81.50	54.77	56.00	37.63	40.60	27.28	30.60	20.56
deflection	mm	inch	1.50	0.06	4.90	0.19	11.60	0.46	18.20	0.72	26.20	1.03	35.80	1.41	46.80	1.84

All truss loading calculations and TUV certifications are based on:
Truss supported or suspended at both ends • Static loadings only • Loads applied in the node points • Self weight of trusses included • Spans made of different truss lengths • Interaction of bending moment and shear force at connector • Structural calculations made in 2014 are based on DIN EN 1999-1-1 and DIN EN 1999-1-1/A2 • All loading data should be multiplied by 0.85 to comply with BS 7905-2 / ANSI E12-2006 / CWA 15902-2 • For any other application, or in case of an assembled structure, contact MILOS or a Structural Engineer • Safety factors used – self weight 1.35 / loading 1.5

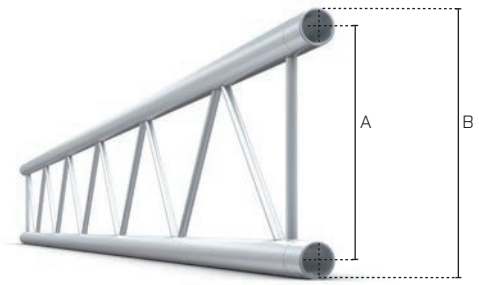

DUO

M222	Main Tubes		Braces		Alloy	A		B		Coupler
BTM	32x1.5mm	1.26"x0.06"	10x1.5mm	0.39"x0.06"	EN - AW 6060 T66	190mm	7.48"	222mm	8.74"	CCM

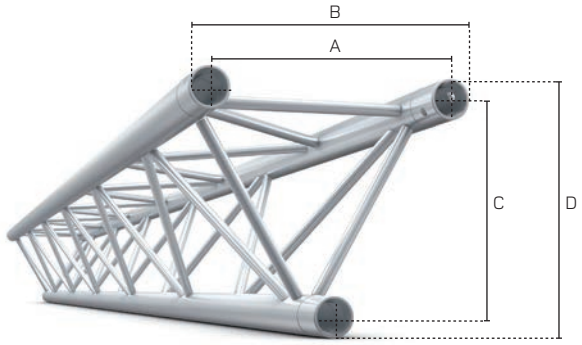

TRIO

M222	Main Tubes		Braces		Alloy	A		B		C		D		Coupler
STM	32x1.5mm	1.26"x0.06"	10x1.5mm	0.39"x0.06"	EN - AW 6060 T66	190mm	7.48"	222mm	8.74"	164mm	6.46"	196mm	7.72"	CCM

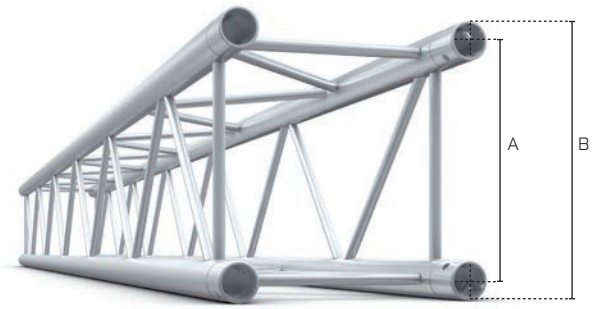

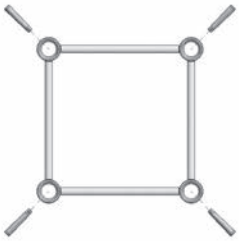

QUATRO

M222	Main Tubes		Braces		Alloy	A		B		Coupler
QTM	32x1.5mm	1.26"x0.06"	10x1.5mm	0.39"x0.06"	EN - AW 6060 T66	190mm	7.48"	222mm	8.74"	CCM

STANDARD LENGTHS AND WEIGHTS AVAILABLE

	m	ft	0.50	1.64	1.00	3.28	1.50	4.92	2.00	6.56	2.50	8.20	3.00	9.84	4.00	13.12
DUO	kg	lbs	0.60	1.33	1.10	2.43	1.60	3.53	2.10	4.63	2.40	5.3	2.8	6.35	3.80	8.38
TRIO	kg	lbs	1.00	2.21	2.00	4.41	2.70	5.95	3.70	8.16	4.50	9.92	5.30	11.68	7.00	15.42
QUATRO	kg	lbs	1.40	3.09	2.60	5.73	3.70	8.16	4.80	10.58	5.50	12.13	6.60	14.55	9.40	20.74

Connection material (pins/clips/couplers) and packaging not included in above weights

Connecting the world
M290 Regular

- Certified 50mm tube M290 series modular truss range
- Interior & exterior applications
- Durable construction with diagonal anti-twist end brace
- Fast connection for quick, simple and secure assembly
- Great free-span & loading characteristics (up to 20m / 65.61 ft)
- Connection kit supplied with every truss length & junction
- Compatible with 200/400/500/600 series cell clamps
- Compatible with Xtruss accessories
- Powder coat colour finish available on request

M290 DUO — LOADING CHART

Span	m	ft	3.00	9.84	4.00	13.12	5.00	16.40	6.00	19.69	7.00	22.97	8.00	26.25	9.00	29.53
point load	kg	lbs	667.50	1471.58	577.60	1273.39	460.00	1014.13	381.10	840.18	324.50	715.40	281.70	621.04	248.10	546.97
deflection	mm	inch	6.00	0.24	12.30	0.48	19.30	0.76	27.80	1.09	38.00	1.50	49.80	1.96	63.20	2.49
two point load	kg	lbs	333.70	735.68	332.60	733.26	331.40	730.61	285.80	630.08	243.30	536.38	211.20	465.62	186.10	410.28
deflection	mm	inch	5.10	0.20	12.10	0.48	23.60	0.93	35.40	1.39	48.20	1.90	63.00	2.48	79.70	3.14
three point load	kg	lbs	222.50	490.53	221.70	488.76	220.90	487.00	190.60	420.20	162.20	357.59	140.80	310.41	124.10	273.59
deflection	mm	inch	4.70	0.19	11.20	0.44	22.00	0.87	32.90	1.30	44.90	1.77	58.70	2.31	74.40	2.93
four point load	kg	lbs	166.90	367.95	166.30	366.63	165.70	365.31	158.80	350.09	135.20	298.06	117.40	258.82	103.40	227.96
deflection	mm	inch	4.50	0.18	10.70	0.42	21.00	0.83	34.90	1.37	47.50	1.87	62.10	2.44	78.70	3.10
distributed load	kg/m	lbs/ft	222.50	149.51	166.30	111.75	132.50	89.04	110.10	73.98	92.70	62.29	70.40	47.31	55.10	37.03
deflection	mm	inch	3.80	0.15	8.90	0.35	17.40	0.69	30.10	1.19	47.20	1.86	61.60	2.43	78.10	3.07

DUO figures are based on use in vertical mode and stabilized every 1m • Higher loading values for U version available

M290 TRIO — LOADING CHART

Span	m	ft	4.00	13.12	6.00	19.69	8.00	26.25	10.00	32.81	12.00	39.37	14.00	45.93	16.00	52.49
point load	kg	lbs	497.20	1096.14	325.60	717.82	238.00	524.70	184.10	405.87	147.00	324.08	119.40	263.23	97.90	215.83
deflection	mm	inch	10.60	0.42	24.00	0.94	43.10	1.70	68.10	2.68	99.50	3.92	137.70	5.42	183.20	7.21
two point load	kg	lbs	372.90	822.10	244.20	538.37	178.50	393.52	138.10	304.46	110.20	242.95	89.60	197.53	73.40	161.82
deflection	mm	inch	13.50	0.53	30.40	1.20	54.10	2.13	84.80	3.34	122.50	4.82	167.40	6.59	219.60	8.65
three point load	kg	lbs	248.60	548.07	162.80	358.91	119.00	262.35	92.00	202.83	73.50	162.04	59.70	131.62	48.90	107.81
deflection	mm	inch	12.50	0.49	28.30	1.11	50.50	1.99	79.40	3.13	115.00	4.53	157.70	6.21	207.80	8.18
four point load	kg	lbs	207.20	456.80	135.70	299.17	99.20	218.70	76.70	169.09	61.20	134.92	49.80	109.79	40.80	89.95
deflection	mm	inch	13.30	0.52	30.00	1.18	53.40	2.10	83.70	3.30	121.00	4.76	165.50	6.52	217.30	8.56
distributed load	kg/m	lbs/ft	248.60	167.05	108.50	72.91	59.50	39.98	36.80	24.73	24.50	16.46	17.10	11.49	12.20	8.20
deflection	mm	inch	13.20	0.52	29.70	1.17	53.00	2.09	83.10	3.27	120.20	4.73	164.40	6.47	216.00	8.50

TRIO figures are based on use in apex up/down orientation • Higher loading values for U version available

M290 QUATRO — LOADING CHART

Span	m	ft	4.00	13.12	6.00	19.69	8.00	26.25	10.00	32.81	12.00	39.37	14.00	45.93	16.00	52.49
point load	kg	lbs	1155.40	2547.22	762.50	1681.02	563.70	1242.74	442.50	975.54	360.20	794.10	300.00	661.39	253.80	559.53
deflection	mm	inch	12.30	0.48	27.80	1.09	49.70	1.96	78.30	3.08	113.70	4.48	156.20	6.15	206.40	8.13
two point load	kg	lbs	665.30	1466.73	571.90	1260.82	422.80	932.11	331.90	731.71	270.10	595.47	225.00	496.04	190.30	419.54
deflection	mm	inch	12.10	0.48	35.40	1.39	63.00	2.48	98.50	3.88	142.10	5.59	193.90	7.63	253.90	10.00
three point load	kg	lbs	443.50	977.75	381.30	840.62	281.80	621.26	221.30	487.88	180.10	397.05	150.00	330.69	126.90	279.77
deflection	mm	inch	11.20	0.44	32.90	1.30	58.70	2.31	91.90	3.62	132.90	5.23	181.70	7.15	238.50	9.39
four point load	kg	lbs	332.60	733.26	317.70	700.41	234.90	517.87	184.40	406.53	150.10	330.91	125.00	275.58	105.70	233.03
deflection	mm	inch	10.70	0.42	34.90	1.37	62.10	2.44	97.20	3.83	140.30	5.52	191.50	7.54	250.90	9.88
distributed load	kg/m	lbs/ft	332.60	223.50	220.20	147.97	140.90	94.68	88.50	59.47	60.00	40.32	42.90	28.83	31.70	21.30
deflection	mm	inch	8.90	0.35	30.10	1.19	61.60	2.43	96.50	3.80	139.30	5.48	190.10	7.48	249.20	9.81

Higher loading values for U version available

All truss loading calculations and TUV certifications are based on:
Truss supported or suspended at both ends • Static loadings only • Loads applied in the node points • Self weight of trusses included • Spans made of different truss lengths • Interaction of bending moment and shear force at connector • Structural calculations made in 2014 are based on DIN EN 1999-1-1 and DIN EN 1999-1-1/A2 • All loading data should be multiplied by 0.85 to comply with BS 7905-2 / ANSI E12-2006 / CWA 15902-2 • For any other application, or in case of an assembled structure, contact MILOS or a Structural Engineer • Safety factors used – self weight 1.35 / loading 1.5

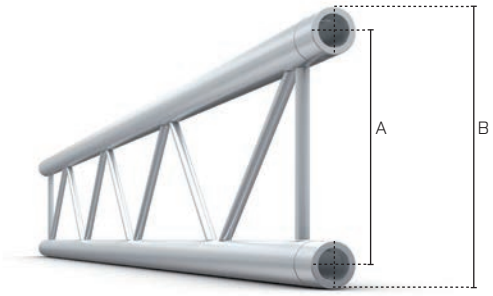

DUO

M290	Main Tubes		Braces		Alloy	A		B		Coupler
BTB	50x2mm	2"x0.08"	16x2mm	0.62"x0.08"	EN - AW 6082 T6	239mm	9.41"	289mm	11.37"	CCB
BTF	50x2mm	2"x0.08"	16x2mm	0.62"x0.08"	EN - AW 6082 T6	239mm	9.41"	289mm	11.37"	CCF
BTU	50x2mm	2"x0.08"	20x2mm	0.78"x0.08"	EN - AW 6082 T6	239mm	9.41"	289mm	11.37"	CCU

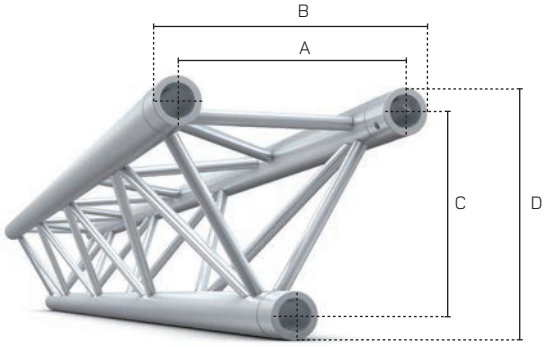

TRIO

M290	Main Tubes		Braces		Alloy	A		B		C		D		Coupler
STB	50x2mm	2"x0.08"	16x2mm	0.62"x0.08"	EN - AW 6082 T6	240mm	9.44"	289mm	11.37"	207mm	8.15"	257mm	10.12"	CCB
STF	50x2mm	2"x0.08"	16x2mm	0.62"x0.08"	EN - AW 6082 T6	239mm	9.41"	289mm	11.37"	207mm	8.15"	257mm	10.12"	CCF
STU	50x2mm	2"x0.08"	20x2mm	0.78"x0.08"	EN - AW 6082 T6	239mm	9.41"	289mm	11.37"	207mm	8.15"	257mm	10.12"	CCU

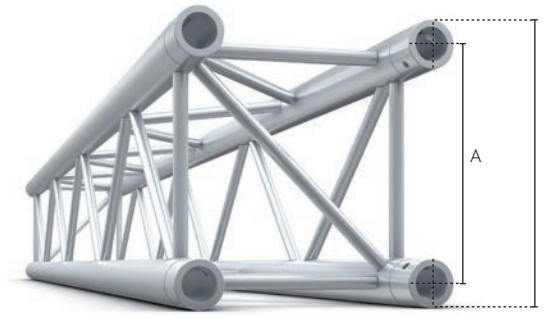

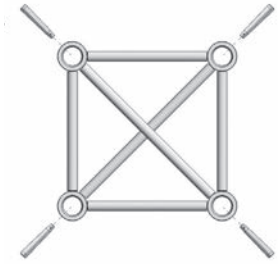

QUATRO

M290	Main Tubes		Braces		Alloy	A		B		Coupler
QTB	50x2mm	2"x0.08"	16x2mm	0.62"x0.08"	EN - AW 6082 T6	240mm	9.44"	290mm	11.41"	CCB
QTF	50x2mm	2"x0.08"	16x2mm	0.62"x0.08"	EN - AW 6082 T6	239mm	9.41"	289mm	11.37"	CCF
QTU	50x2mm	2"x0.08"	20x2mm	0.78"x0.08"	EN - AW 6082 T6	239mm	9.41"	289mm	11.37"	CCU

STANDARD LENGTHS AND WEIGHTS AVAILABLE

	m	ft	0.50	1.64	1.00	3.28	1.50	4.92	2.00	6.56	2.50	8.20	3.00	9.84	4.00	13.12	5.00	16.41
DUO	kg	lbs	1.70	3.75	2.60	5.73	3.60	7.94	4.50	9.92	5.50	12.13	6.60	14.55	8.50	18.74	10.30	22.71
TRIO	kg	lbs	2.80	6.17	4.50	9.92	6.00	13.22	7.70	16.98	9.10	20.06	10.80	23.81	14.10	31.09	18.00	39.68
QUATRO	kg	lbs	3.90	8.60	6.00	13.23	8.30	18.30	10.60	23.37	12.90	28.44	15.00	33.07	19.60	43.21	23.50	51.81

Connection material (pins/clips/couplers) and packaging not included in above weights

Milos. Works better.

Connecting the world

M290 Heavy-Duty

- Certified 48mm tube heavy-duty M290 series truss range
- Keystone system used within PA & Rigging Towers & Roofs
- Durable construction with diagonal anti-twist end brace
- Fast connection for quick, simple and secure assembly
- Great free-span & loading characteristics (up to 20m / 65.61 ft)
- Connection kit supplied with every truss length & junction
- Compatible with 200/400/500/600 series cell clamps
- Compatible with Xtruss accessories
- Powder coat colour finish available on request

M290V DUO — LOADING CHART

Span	m	ft	3.00	9.84	4.00	13.12	5.00	16.40	6.00	19.69	7.00	22.97	8.00	26.25	9.00	29.53
point load	kg	lbs	666.90	1470.26	664.40	1464.75	648.80	1430.36	538.30	1186.75	459.00	1011.92	399.20	880.08	352.40	776.91
deflection	mm	inch	4.30	0.17	10.10	0.40	19.30	0.76	27.90	1.10	38.00	1.50	49.70	1.96	63.10	2.48
two point load	kg	lbs	333.50	735.24	332.20	732.37	330.90	729.51	329.60	726.64	328.30	723.78	299.40	660.06	264.30	582.68
deflection	mm	inch	3.60	0.14	8.60	0.34	16.80	0.66	29.00	1.14	46.10	1.81	63.10	2.48	79.90	3.15
three point load	kg	lbs	222.30	490.09	221.50	488.32	220.60	486.34	219.70	484.36	218.90	482.59	199.60	440.04	176.20	388.45
deflection	mm	inch	3.40	0.13	8.00	0.31	15.60	0.61	27.00	1.06	42.90	1.69	58.70	2.31	74.40	2.93
four point load	kg	lbs	166.70	367.51	166.10	366.19	165.50	364.86	164.80	363.32	164.20	362.00	163.50	360.46	146.90	323.86
deflection	mm	inch	3.20	0.13	7.70	0.30	15.00	0.59	25.80	1.02	41.00	1.61	61.20	2.41	78.80	3.10
distributed load	kg/m	lbs/ft	222.30	149.38	166.10	111.61	132.40	88.97	109.90	73.85	93.80	63.03	81.80	54.97	72.40	48.65
deflection	mm	inch	2.70	0.11	6.30	0.25	12.40	0.49	21.40	0.84	34.10	1.34	50.90	2.00	72.50	2.85

DUO figures are based on use in vertical mode and stabilized every 1m

M290V TRIO — LOADING CHART

Span	m	ft	4.00	13.12	6.00	19.69	8.00	26.25	10.00	32.81	12.00	39.37	14.00	45.93	16.00	52.49
point load	kg	lbs	700.50	1544.34	459.80	1013.68	337.30	743.62	262.10	577.83	210.50	464.07	172.40	380.08	142.80	314.82
deflection	mm	inch	10.60	0.42	24.00	0.94	43.10	1.70	68.00	2.68	99.20	3.91	137.00	5.39	182.00	7.17
two point load	kg	lbs	525.40	1158.31	344.90	760.37	253.00	557.77	196.60	433.43	157.90	348.11	129.30	285.06	107.10	236.11
deflection	mm	inch	13.50	0.53	30.50	1.20	54.30	2.14	85.00	3.35	122.70	4.83	167.60	6.60	219.80	8.65
three point load	kg	lbs	350.20	772.06	229.90	506.84	168.70	371.92	131.00	288.81	105.30	232.15	86.20	190.04	71.40	157.41
deflection	mm	inch	12.60	0.50	28.40	1.12	50.60	1.99	79.50	3.13	115.10	4.53	157.70	6.21	207.50	8.17
four point load	kg	lbs	287.80	634.49	191.60	422.41	140.50	309.75	109.20	240.74	87.70	193.35	71.80	158.29	59.50	131.17
deflection	mm	inch	13.20	0.52	30.10	1.19	53.60	2.11	83.90	3.30	121.20	4.77	165.70	6.52	217.40	8.56
distributed load	kg/m	lbs/ft	287.80	193.39	153.30	103.01	84.30	56.65	52.40	35.21	35.10	23.59	24.60	16.53	17.80	11.96
deflection	mm	inch	10.90	0.43	29.80	1.17	53.10	2.09	83.30	3.28	120.40	4.74	164.60	6.48	216.00	8.50

TRIO figures are based on use in apex up/down orientation

M290V QUATRO — LOADING CHART

Span	m	ft	4.00	13.12	6.00	19.69	8.00	26.25	10.00	32.81	12.00	39.37	14.00	45.93	16.00	52.49
point load	kg	lbs	1328.00	2927.74	1076.00	2372.17	797.70	1758.63	628.60	1385.82	514.10	1133.40	430.80	949.75	366.90	808.88
deflection	mm	inch	10.10	0.40	27.90	1.10	49.70	1.96	78.20	3.08	113.30	4.46	155.50	6.12	205.00	8.07
two point load	kg	lbs	664.00	1463.87	658.70	1452.18	598.30	1319.02	471.40	1039.26	385.60	850.10	323.10	712.31	275.20	606.71
deflection	mm	inch	8.60	0.34	29.00	1.14	63.10	2.48	98.70	3.89	142.30v	5.60	194.00	7.64	254.00	10.00
three point load	kg	lbs	442.70	975.99	439.10	968.05	398.90	879.42	314.30	692.91	257.00	566.59	215.40	474.88	183.50	404.55
deflection	mm	inch	8.00	0.31	27.00	1.06	58.70	2.31	92.00	3.62	132.90	5.23	181.50	7.15	238.00	9.37
four point load	kg	lbs	332.00	731.93	329.30	725.98	326.70	720.25	261.90	577.39	214.20	472.23	179.50	395.73	152.90	337.09
deflection	mm	inch	7.70	0.30	25.80	1.02	61.20	2.41	97.40	3.83	140.50	5.53	191.60	7.54	250.80	9.87
distributed load	kg/m	lbs/ft	332.00	223.09	219.60	147.56	163.30	109.73	125.70	84.47	85.70	57.59	61.50	41.33	45.90	30.84
deflection	mm	inch	6.30	0.25	21.40	0.84	50.90	2.00	96.60	3.80	139.40	5.49	190.20	7.49	249.10	9.81

All truss loading calculations and TUV certifications are based on:
Truss supported or suspended at both ends • Static loadings only • Loads applied in the node points • Self weight of trusses included • Spans made of different truss lengths • Interaction of bending moment and shear force at connector • Structural calculations made in 2014 are based on DIN EN 1999-1-1 and DIN EN 1999-1-1/A2 • All loading data should be multiplied by 0.85 to comply with BS 7905-2 / ANSI E12-2006 / CWA 15902-2 • For any other application, or in case of an assembled structure, contact MILOS or a Structural Engineer • Safety factors used – self weight 1.35 / loading 1.5

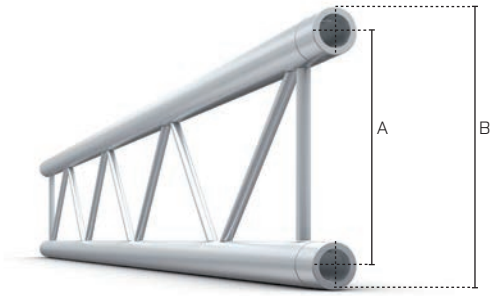

DUO

M290V	Main Tubes		Braces		Alloy	A		B		Coupler
BTV	48x3mm	1.89"x0.12"	16x2mm	0.62"x0.08"	EN - AW 6082 T6	239mm	9.41"	288mm	11.34"	CCB
BTVF	48x3mm	1.89"x0.12"	16x2mm	0.62"x0.08"	EN - AW 6082 T6	239mm	9.41"	288mm	11.34"	CCF
BTVU	48x3mm	1.89"x0.12"	20x2mm	0.78"x0.08"	EN - AW 6082 T6	239mm	9.41"	288mm	11.34"	CCU

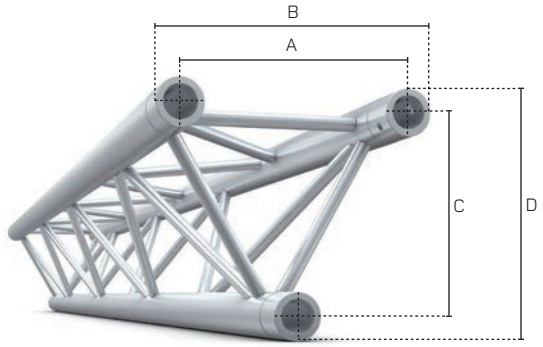

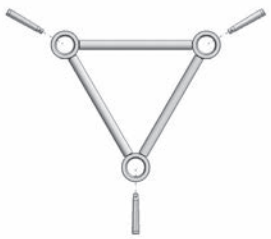

TRIO

M290V	Main Tubes		Braces		Alloy	A		B		C		D		Coupler
STV	48x3mm	1.89"x0.12"	16x2mm	0.62"x0.08"	EN - AW 6082 T6	239mm	9.44"	288mm	11.34"	207mm	8.15"	255mm	10.04"	CCB
STVF	48x3mm	1.89"x0.12"	16x2mm	0.62"x0.08"	EN - AW 6082 T6	239mm	9.41"	288mm	11.34"	207mm	8.15"	255mm	10.04"	CCF
STVU	48x3mm	1.89"x0.12"	20x2mm	0.78"x0.08"	EN - AW 6082 T6	239mm	9.41"	288mm	11.34"	207mm	8.15"	255mm	10.04"	CCU

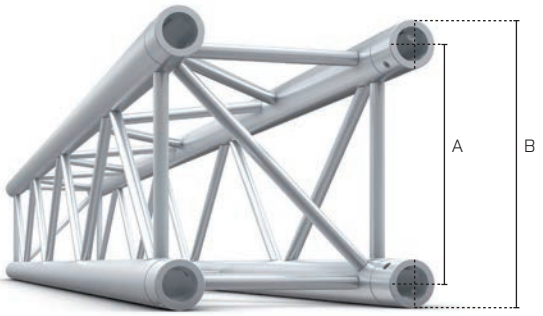

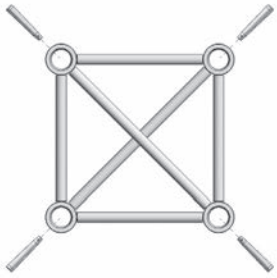

QUATRO

M290V	Main Tubes		Braces		Alloy	A		B		Coupler
QTV	48x3mm	1.89"x0.12"	16x2mm	0.62"x0.08"	EN - AW 6082 T6	240mm	9.44"	288mm	11.34"	CCB
QTVF	48x3mm	1.89"x0.12"	16x2mm	0.62"x0.08"	EN - AW 6082 T6	239mm	9.41"	288mm	11.34"	CCF
QTVU	48x3mm	1.89"x0.12"	20x2mm	0.78"x0.08"	EN - AW 6082 T6	239mm	9.41"	288mm	11.34"	CCU

STANDARD LENGTHS AND WEIGHTS AVAILABLE

	m	ft	0.50	1.64	1.00	3.28	1.50	4.92	2.00	6.56	2.50	8.20	3.00	9.84	4.00	13.12	5.00	16.41
DUO	kg	lbs	1.70	3.9	3.00	6.75	4.30	9.57	5.70	12.57	6.90	15.21	8.10	17.86	10.70	23.7	13.30	29.34
TRIO	kg	lbs	2.90	6.39	5.00	11.02	7.10	15.65	9.30	20.50	11.40	25.13	13.50	29.76	18.00	39.68	22.00	48.50
QUATRO	kg	lbs	4.10	9.04	7.00	15.43	9.90	21.83	12.50	27.56	15.50	34.17	18.30	40.35	24.00	52.91	29.70	65.48

Connection material (pins/clips/couplers) and packaging not included in above weights

Connecting the world

M290E

- Modular truss series with integrated lighting track
- Perfect for retail, display & architectural environments
- Supplied with 3x16 amp mains track (Eutrac)
- Track adapters & accessories to suit a wide range of lighting fixtures
- Custom lengths & curves available
- Connection kit supplied with every truss component
- Powder coat colour finish available on request

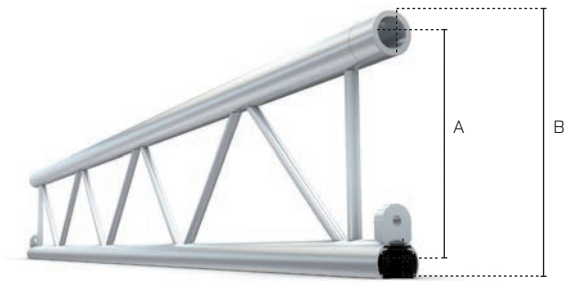

DUO

M290E	Main Tubes		Braces		Alloy	A		B		Coupler
BTBE	50 x2mm	2"x0.08"	16x2mm	0.62"x0.08"	EN - AW 6060 T6 / 6082 T6	240mm	9.45"	280mm	11.00"	CCB + Bolt M10x45

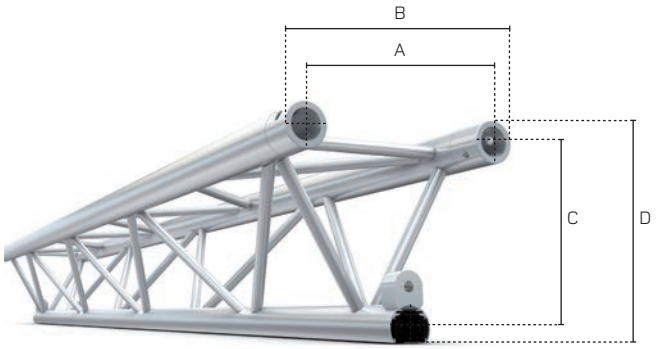

TRIO

M290E	Main Tubes		Braces		Alloy	A		B		C		D		Coupler
STBE	50x2mm	2"x0.08"	16x2mm	0.62"x0.08"	EN - AW 6060 T6 / 6082 T6	240mm	9.44"	290mm	11.42"	207mm	8.15"	247mm	9.72"	CCB + Bolt M12x75

STANDARD LENGTHS AND WEIGHTS AVAILABLE

	m	ft	0.50	1.64	1.00	3.28	1.50	4.92	2.00	6.56	2.50	8.20	3.00	9.84	4.00	13.12	5.00	16.41
DUO	kg	lbs	1.60	3.73	3.00	6.66	4.30	9.57	5.70	12.06	6.90	15.39	8.30	18.48	10.60	23.48	13.50	29.96
TRIO	kg	lbs	2.80	6.33	4.80	10.75	4.20	9.26	8.80	19.53	10.80	23.92	12.80	28.31	16.50	36.44	13.50	45.92

Connection material (pins/clips/couplers) and packaging not included in above weights

EUT 01 Eurotrac electro straight coupler

EUT 02 Eurotrac end cap

EUT 03 Eurotrac earth contact

EUT 04 Eurotrac floating mid feed

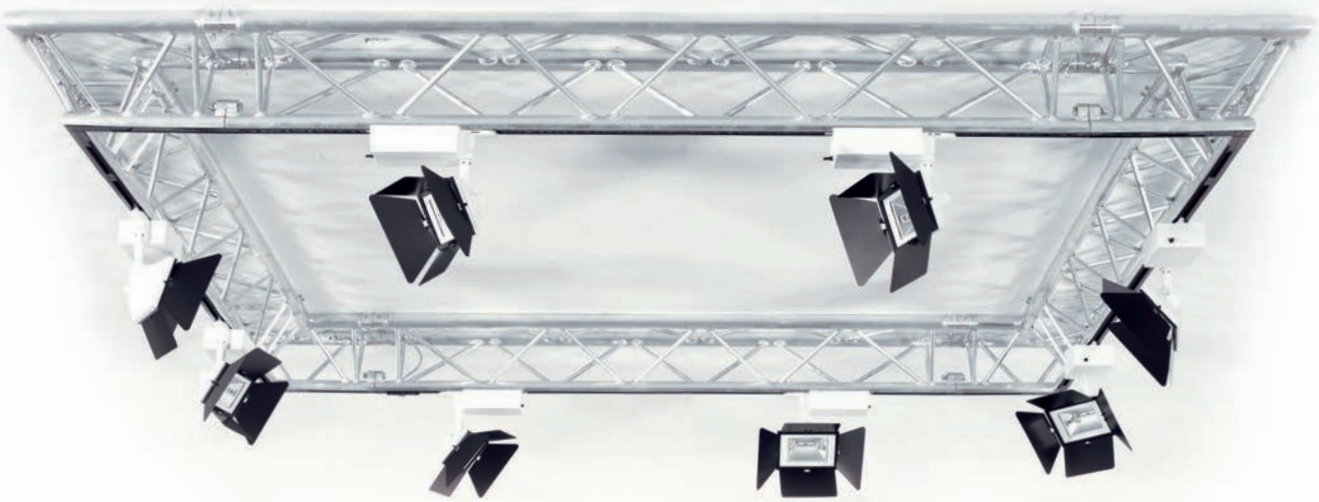

Connecting the world

M390 Regular

- Certified 50mm tube
- Interior & exterior applications
- Fast connection for quick, simple and secure assembly
- Great free-span & loading characteristics (up to 20m / 65.61 ft)
- Custom lengths, junctions & curves available
- Powder coat colour finish available on request
- Connection kit supplied with every truss length & junction
- Compatible with 200/400/500/600 series cell clamps

M390 DUO — LOADING CHART

Span	m	ft	3.00	9.84	4.00	13.12	5.00	16.40	6.00	19.69	7.00	22.97	8.00	26.25	9.00	29.53
point load	kg	lbs	998.00	2200.21	820.50	1808.89	654.30	1442.48	543.20	1197.55	463.40	1021.62	403.40	889.34	356.40	785.73
deflection	mm	inch	4.50	0.18	8.80	0.35	13.70	0.54	19.80	0.78	27.00	1.06	35.30	1.39	44.80	1.76
two point load	kg	lbs	625.50	1378.99	529.00	1166.24	471.00	1038.38	407.40	898.16	347.60	766.33	302.50	666.90	267.30	589.29
deflection	mm	inch	4.80	0.19	9.60	0.38	16.80	0.66	25.20	0.99	34.30	1.35	44.80	1.76	56.80	2.24
three point load	kg	lbs	417.00	919.33	398.00	877.44	327.20	721.35	271.60	598.77	231.70	510.81	201.70	444.67	178.20	392.86
deflection	mm	inch	4.50	0.18	10.10	0.40	16.30	0.64	23.40	0.92	31.90	1.26	41.80	1.65	52.90	2.08
four point load	kg	lbs	312.70	689.38	312.20	688.28	272.60	600.98	226.30	498.91	193.10	425.71	168.10	370.60	148.50	327.39
deflection	mm	inch	4.30	0.17	10.10	0.40	17.30	0.68	24.90	0.98	33.80	1.33	44.20	1.74	56.00	2.20
distributed load	kg/m	lbs/ft	417.00	280.21	312.20	209.79	249.30	167.52	181.10	121.69	132.40	88.97	100.80	67.73	79.20	53.22
deflection	mm	inch	3.50	0.14	8.40	0.33	16.30	0.64	24.70	0.97	33.60	1.32	43.90	1.73	55.60	2.19

DUO figures are based on use in vertical mode and stabilized every 1m

M390 TRIO — LOADING CHART

Span	m	ft	4.00	13.12	6.00	19.69	8.00	26.25	10.00	32.81	12.00	39.37	14.00	45.93	16.00	52.49
point load	kg	lbs	705.10	1554.48	462.20	1018.98	338.50	746.26	262.40	578.49	210.10	463.19	171.40	377.87	141.20	311.29
deflection	mm	inch	7.60	0.30	17.20	0.68	30.80	1.21	48.70	1.92	71.00	2.80	98.20	3.87	130.60	5.14
two point load	kg	lbs	528.80	1165.80	346.70	764.34	253.90	559.75	196.80	433.87	157.50	347.23	128.50	283.29	105.90	233.47
deflection	mm	inch	9.70	0.38	21.80	0.86	38.80	1.53	60.70	2.39	87.70	3.45	119.80	4.72	157.10	6.19
three point load	kg	lbs	352.50	777.13	231.10	509.49	169.20	373.02	131.20	289.25	105.00	231.49	85.70	188.94	70.60	155.65
deflection	mm	inch	9.00	0.35	20.30	0.80	36.20	1.43	56.80	2.24	82.30	3.24	112.80	4.44	148.50	5.85
four point load	kg	lbs	293.80	647.72	192.60	424.61	141.00	310.85	109.30	240.96	87.50	192.90	71.40	157.41	58.80	129.63
deflection	mm	inch	9.50	0.37	21.50	0.85	38.20	1.50	59.90	2.36	86.60	3.41	118.40	4.66	155.40	6.12
distributed load	kg/m	lbs/ft	352.50	236.87	154.10	103.55	84.60	56.85	52.50	35.28	35.00	23.52	24.50	16.46	17.60	11.83
deflection	mm	inch	9.40	0.37	21.30	0.84	38.00	1.50	59.50	2.34	86.00	3.39	117.60	4.63	154.50	6.08

TRIO figures are based on use in apex up/down orientation

M390 QUATRO — LOADING CHART

Span	m	ft	4.00	13.12	6.00	19.69	8.00	26.25	10.00	32.81	12.00	39.37	14.00	45.93	16.00	52.49
point load	kg	lbs	1491.00	3287.09	1083.30	2388.26	802.70	1769.65	632.10	1393.54	516.50	1138.69	432.30	953.06	367.80	810.86
deflection	mm	inch	8.00	0.31	19.80	0.78	35.40	1.39	55.60	2.19	80.70	3.18	110.70	4.36	146.00	5.75
two point load	kg	lbs	946.00	2085.57	747.00	1646.85	602.00	1327.18	474.10	1045.21	387.40	854.07	324.20	714.74	275.80	608.03
deflection	mm	inch	8.60	0.34	23.20	0.91	44.90	1.77	70.20	2.76	101.20	3.98	138.10	5.44	180.70	7.11
three point load	kg	lbs	713.00	1571.89	541.70	1194.24	401.30	884.71	316.00	696.66	258.20	569.23	216.10	476.42	183.90	405.43
deflection	mm	inch	9.10	0.36	23.50	0.93	41.80	1.65	65.50	2.58	94.60	3.72	129.20	5.09	169.40	6.67
four point load	kg	lbs	586.00	1291.91	451.40	995.17	334.50	737.45	263.40	580.70	215.20	474.43	180.10	397.05	153.20	337.75
deflection	mm	inch	9.50	0.37	24.90	0.98	44.30	1.74	69.30	2.73	99.90	3.93	136.30	5.37	178.50	7.0 3
distributed load	kg/m	lbs/ft	623.30	418.84	361.10	242.65	200.70	134.86	126.40	84.94	86.10	57.86	61.80	41.53	46.00	30.91
deflection	mm	inch	8.40	0.33	24.70	0.97	43.90	1.73	68.70	2.70	99.20	3.91	135.30	5.33	177.20	6.98

All truss loading calculations and TUV certifications are based on:
Truss supported or suspended at both ends • Static loadings only • Loads applied in the node points • Self weight of trusses included • Spans made of different truss lengths • Interaction of bending moment and shear force at connector • Structural calculations made in 2014 are based on DIN EN 1999-1-1 and DIN EN 1999-1-1/A2 • All loading data should be multiplied by 0.85 to comply with BS 7905-2 / ANSI E12-2006 / CWA 15902-2 • For any other application, or in case of an assembled structure, contact MILOS or a Structural Engineer • Safety factors used – self weight 1.35 / loading 1.5

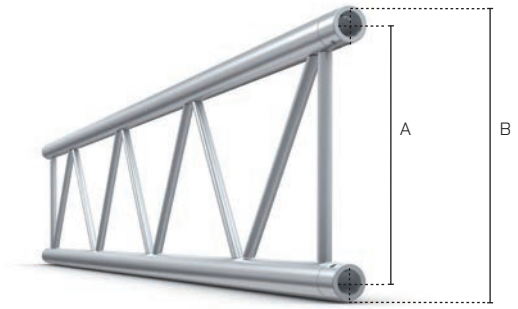

DUO

M390	Main Tubes		Braces		Alloy	A		B		Coupler
BTK	50x2mm	2"x0.08"	20x2mm	0.78"x0.08"	EN - AW 6082 T6	339mm	13.35"	390mm	15.35"	CCB
BTKF	50x2mm	2"x0.08"	20x2mm	0.78"x0.08"	EN - AW 6082 T6	339mm	13.35"	390mm	15.35"	CCF

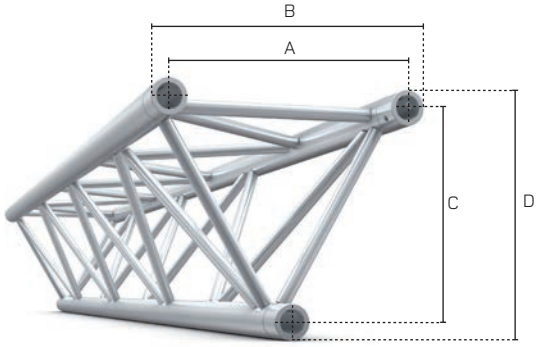

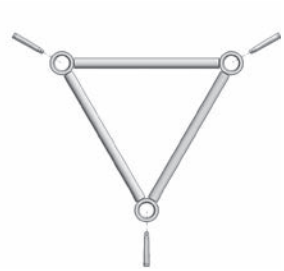

TRIO

M390	Main Tubes		Braces		Alloy	A		B		C		D		Coupler
STK	50x2mm	2"x0.08"	20x2mm	0.78"x0.08"	EN - AW 6082 T6	339mm	13.35"	390mm	15.35"	294mm	11.57"	344mm	13.54"	CCB
STKF	50x2mm	2"x0.08"	20x2mm	0.78"x0.08"	EN - AW 6082 T6	339mm	13.35"	390mm	15.35"	294mm	11.57"	344mm	13.54"	CCF

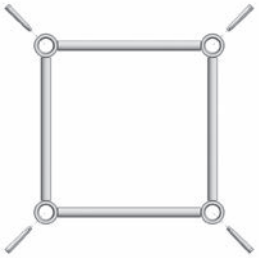

QUATRO

M390	Main Tubes		Braces		Alloy	A		B		Coupler
QTK	50x2mm	2"x0.08"	20x2mm	0.78"x0.08"	EN - AW 6082 T6	339mm	13.35"	390mm	15.35"	CCB
QTKF	50x2mm	2"x0.08"	20x2mm	0.78"x0.08"	EN - AW 6082 T6	339mm	13.35"	390mm	15.35"	CCF

STANDARD LENGTHS AND WEIGHTS AVAILABLE

	m	ft	0.50	1.64	1.00	3.28	1.50	4.92	2.00	6.56	2.50	8.20	3.00	9.84	4.00	13.12	5.00	16.41
DUO	kg	lbs	1.60	3.57	2.60	5.87	3.70	8.16	4.70	10.43	5.70	12.72	6.80	14.99	8.80	19.56	10.90	24.12
TRIO	kg	lbs	3.10	6.84	4.70	10.53	7.10	15.65	8.80	19.04	10.10	22.27	12.90	22.48	16.00	35.36	19.70	43.63
QUATRO	kg	lbs	4.10	9.04	6.30	14.04	9.10	20.06	11.50	25.35	13.90	30.64	16.30	36.12	21.50	47.4	26.30	58.18

Connection material (pins/clips/couplers) and packaging not included in above weights

Milos. Works better.

Connecting the world

M390 Heavy-Duty

- Certified 48mm tube heavy-duty M390 series truss range
- Interior & exterior applications
- Fast connection for quick, simple and secure assembly
- Great free-span & loading characteristics (up to 20m / 65.61 ft)
- Custom lengths, junctions & curves available
- Connection kit supplied with every truss length & junction
- Compatible with 200/400/500/600 series cell clamps
- Powder coat colour finish available on request

M390L DUO — LOADING CHART

Span	m	ft	3.00	9.84	4.00	13.12	5.00	16.40	6.00	19.69	7.00	22.97	8.00	26.25	9.00	29.53
point load	kg	lbs	1249.30	2754.23	1154.60	2545.45	921.10	2030.68	765.00	1686.53	653.00	1439.62	568.80	1253.99	502.90	1108.70
deflection	mm	inch	4.00	0.16	8.80	0.35	13.70	0.54	19.80	0.78	27.00	1.06	35.30	1.39	44.80	1.76
two point load	kg	lbs	624.60	1377.01	623.20	1373.92	621.80	1370.83	573.70	1264.79	489.80	1079.82	426.60	940.49	377.20	831.58
deflection	mm	inch	3.40	0.13	8.10	0.32	15.80	0.62	25.20	0.99	34.40	1.35	44.90	1.77	56.80	2.24
three point load	kg	lbs	416.40	918.00	415.50	916.02	414.50	913.81	382.50	843.27	326.50	719.81	284.40	626.99	251.40	554.24
deflection	mm	inch	3.20	0.13	7.50	0.30	14.70	0.58	23.50	0.93	32.00	1.26	41.80	1.65	52.90	2.08
four point load	kg	lbs	312.30	688.50	311.60	686.96	310.90	685.42	310.20	683.87	272.10	599.88	237.00	522.49	209.50	461.87
deflection	mm	inch	3.00	0.12	7.20	0.28	14.00	0.55	24.20	0.95	33.90	1.33	44.30	1.74	56.10	2.21
distributed load	kg/m	lbs/ft	416.40	279.81	311.60	209.39	248.70	167.12	206.80	138.96	176.80	118.80	142.20	95.55	111.70	75.06
deflection	mm	inch	2.50	0.10	5.90	0.23	11.60	0.46	20.10	0.79	31.90	1.26	43.90	1.73	55.60	2.19

DUO figures are based on use in vertical mode and stabilized every 1m

M390L TRIO — LOADING CHART

Span	m	ft	6.00	19.69	8.00	26.25	10.00	32.81	12.00	39.37	14.00	45.93	16.00	52.49	18.00	59.06
point load	kg	lbs	654.90	1443.81	482.50	1063.73	377.10	831.36	305.20	672.85	252.40	556.45	211.50	466.28	178.70	393.97
deflection	mm	inch	17.20	0.68	30.70	1.21	48.40	1.91	70.40	2.77	97.00	3.82	128.40	5.06	165.00	6.50
two point load	kg	lbs	491.20	1082.91	361.90	797.85	282.80	623.47	228.90	504.64	189.30	417.33	158.60	349.65	134.00	295.42
deflection	mm	inch	21.80	0.86	38.80	1.53	60.70	2.39	87.60	3.45	119.60	4.71	156.70	6.17	199.00	7.83
three point load	kg	lbs	327.50	722.01	241.30	531.97	188.50	415.57	152.60	336.43	126.20	278.22	105.80	233.25	89.30	196.87
deflection	mm	inch	20.30	0.80	36.20	1.43	56.70	2.23	82.00	3.23	112.20	4.42	147.50	5.81	188.00	7.40
four point load	kg	lbs	272.90	601.64	201.00	443.13	157.10	346.35	127.10	280.21	105.20	231.93	88.10	194.23	74.40	164.02
deflection	mm	inch	21.50	0.85	38.30	1.51	59.90	2.36	86.50	3.41	118.10	4.65	154.90	6.10	196.90	7.75
distributed load	kg/m	lbs/ft	218.30	146.69	120.60	81.04	75.40	50.67	50.90	34.20	36.10	24.26	26.40	17.74	19.90	13.37
deflection	mm	inch	21.30	0.84	38.00	1.50	59.50	2.34	85.90	3.38	117.30	4.62	153.90	6.06	195.60	7.70

TRIO figures are based on use in apex up/down orientation

M390L QUATRO — LOADING CHART

Span	m	ft	6.00	19.69	8.00	26.25	10.00	32.81	12.00	39.37	14.00	45.93	16.00	52.49	18.00	59.06
point load	kg	lbs	1526.90	3366.23	1133.50	2498.94	894.70	1972.47	733.30	1616.65	616.10	1358.27	526.60	1160.95	455.40	1003.98
deflection	mm	inch	19.80	0.78	35.40	1.39	55.60	2.19	80.50	3.17	110.30	4.34	145.30	5.72	185.60	7.31
two point load	kg	lbs	1054.00	2323.67	850.10	1874.15	671.00	1479.30	550.00	1212.54	462.10	1018.75	394.90	870.60	341.50	752.88
deflection	mm	inch	23.20	0.91	44.90	1.77	70.20	2.76	101.30	3.99	138.10	5.44	180.70	7.11	229.20	9.02
three point load	kg	lbs	763.50	1683.23	566.70	1249.36	447.40	986.35	366.70	808.43	308.10	679.24	263.30	580.48	227.70	501.99
deflection	mm	inch	23.50	0.93	41.80	1.65	65.50	2.58	94.50	3.72	129.10	5.08	169.20	6.66	215.00	8.46
four point load	kg	lbs	618.90	1364.44	472.30	1041.24	372.80	821.88	305.60	673.73	256.70	565.93	219.40	483.69	189.70	418.22
deflection	mm	inch	24.20	0.95	44.30	1.74	69.30	2.73	99.90	3.93	136.30	5.37	178.40	7.02	226.40	8.91
distributed load	kg/m	lbs/ft	412.60	277.25	283.40	190.44	178.90	120.22	122.20	82.11	88.00	59.13	65.80	44.22	50.60	34.00
deflection	mm	inch	20.10	0.79	43.90	1.73	68.80	2.71	99.20	3.91	135.30	5.33	177.10	6.97	224.80	8.85

All truss loading calculations and TUV certifications are based on:
Truss supported or suspended at both ends • Static loadings only • Loads applied in the node points • Self weight of trusses included • Spans made of different truss lengths • Interaction of bending moment and shear force at connector • Structural calculations made in 2014 are based on DIN EN 1999-1-1 and DIN EN 1999-1-1/A2 • All loading data should be multiplied by 0.85 to comply with BS 7905-2 / ANSI E12-2006 / CWA 15902-2 • For any other application, or in case of an assembled structure, contact MILOS or a Structural Engineer • Safety factors used – self weight 1.35 / loading 1.5

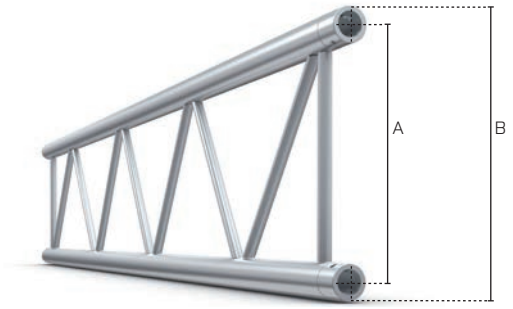

DUO

M390L	Main Tubes		Braces		Alloy	A		B		Coupler
BTL	48x3mm	1.89"x0.12"	20x2mm	0.78"x0.08"	EN - AW 6082 T6	340mm	13.39"	388mm	15.28"	CCB
BTLF	48x3mm	1.89"x0.12"	20x2mm	0.78"x0.08"	EN - AW 6082 T6	340mm	13.39"	388mm	15.28"	CCF

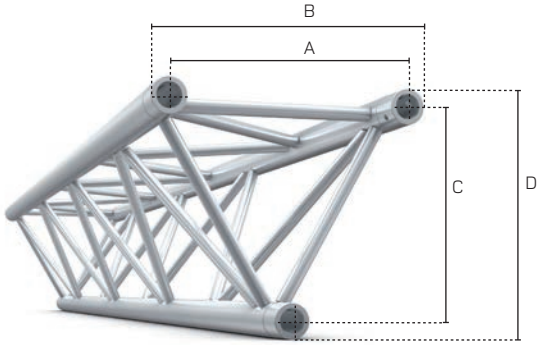

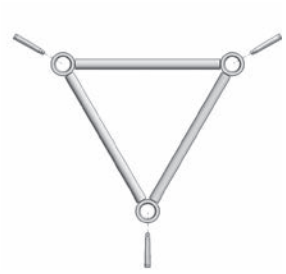

TRIO

M390L	Main Tubes		Braces		Alloy	A		B		C		D		Coupler
STL	48x3mm	1.89"x0.12"	20x2mm	0.78"x0.08"	EN - AW 6082 T6	340mm	13.39"	388mm	15.28"	294mm	11.57"	342mm	13.46"	CCB
STLF	48x3mm	1.89"x0.12"	20x2mm	0.78"x0.08"	EN - AW 6082 T6	340mm	13.39"	388mm	15.28"	294mm	11.57"	342mm	13.46"	CCF

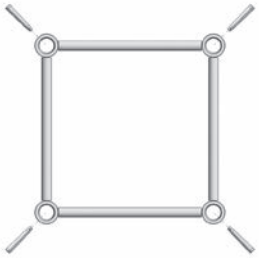

QUATRO

M390L	Main Tubes		Braces		Alloy	A		B		Coupler
QTL	48x3mm	1.89"x0.12"	20x2mm	0.78"x0.08"	EN - AW 6082 T6	340mm	13.39"	388mm	15.28"	CCB
QTLF	48x3mm	1.89"x0.12"	20x2mm	0.78"x0.08"	EN - AW 6082 T6	340mm	13.39"	388mm	15.28"	CCF

STANDARD LENGTHS AND WEIGHTS AVAILABLE

	m	ft	0.50	1.64	1.00	3.28	1.50	4.92	2.00	6.56	2.50	8.20	3.00	9.84	4.00	13.12	5.00	16.41
DUO	kg	lbs	2.00	4.41	3.30	7.28	4.50	10.01	6.00	13.23	7.20	16.03	8.60	19.05	11.30	25.07	14.10	31.11
TRIO	kg	lbs	3.10	6.88	5.60	12.35	7.90	17.46	10.50	23.15	12.60	27.93	15.30	33.73	20.50	45.20	25.00	55.12
QUATRO	kg	lbs	3.50	7.83	7.60	16.76	10.80	23.81	14.00	30.87	17.10	37.7	20.30	44.75	26.40	58.2	33.00	72.75

Connection material (pins/clips/couplers) and packaging not included in above weights

Connecting the world

M290x390

- Parallel diagonals allow for Trio truss to slip through
- Horizontal bracing at node points counteract horizontal force caused by slinging 4
- 8 mm bottom brace for trouble-free suspension of lighting fixtures
- 25% less transport volume compared to QTP
- Easy pin access due to horizontal positioning of pin holes at bottom tubes
- Compatible with 200/400/500/600 series cell clamps

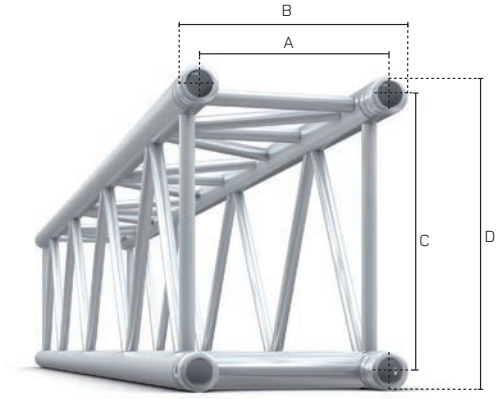

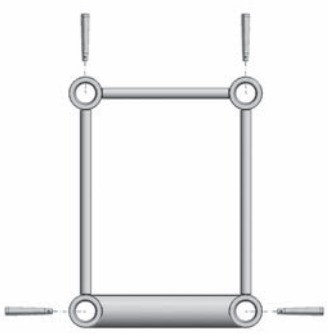

RECT

M290x390	Main Tubes		Braces		Alloy	A		B		C		D		Coupler
RTL	48x3mm	1.89"x0.12"	48x3mm	1.89"x0.12"	EN - AW 6082 T6	240mm	9.45"	290mm	11.40"	340mm	13.38"	390mm	15.35"	CCB
			20x2mm	0.78"x0.08"										

M290x390 RECT — LOADING CHART

Span	m	ft	4.00	13.12	5.00	16.40	6.00	19.69	7.00	22.97	8.00	26.25	9.00	29.53	10.00	32.81
point load	kg	lbs	1938.00	4273.29	1637.00	3609.59	1404.00	3095.82	1224.00	2698.92	1087.00	2396.84	970.00	2138.85	875.00	1929.38
deflection	mm	inch	7.40	0.29	12.30	0.48	18.30	0.71	25.50	0.99	34.00	1.33	43.60	1.70	54.50	2.13
two point load	kg	lbs	1278.00	2817.99	1103.00	2432.12	973.00	2145.47	859.00	1894.10	773.00	1704.47	697.00	1536.89	630.00	1389.15
deflection	mm	inch	8.30	0.32	14.00	0.55	21.50	0.84	30.30	1.18	41.00	1.60	53.00	2.07	66.20	2.58
three point load	kg	lbs	925.70	2041.17	883.00	1947.02	755.00	1664.78	650.80	1435.01	566.20	1248.47	500.00	1102.50	446.70	984.97
deflection	mm	inch	8.40	0.33	15.60	0.61	23.20	0.90	32.00	1.25	41.80	1.63	53.00	2.07	65.50	2.55
four point load	kg	lbs	694.30	1530.93	692.60	1527.18	604.00	1331.82	521.00	1148.81	462.00	1018.71	412.00	908.46	369.00	813.65
deflection	mm	inch	8.00	0.31	15.60	0.61	23.70	0.92	32.60	1.27	43.40	1.69	55.60	2.17	68.60	2.68
distributed load	kg/m	lbs/ft	694.30	466.55	554.10	372.34	460.50	309.44	371.90	249.91	283.10	190.23	222.20	149.31	178.70	120.08
deflection	mm	inch	6.60	0.26	13.00	0.51	22.40	0.87	33.60	1.31	44.00	1.72	55.70	2.17	68.80	2.68

Span	11.00	36.09	12.00	39.37	13.00	42.65	14.00	45.93	15.00	49.21	16.00	52.49	18.00	59.06	20.00	65.62
point load	789.00	1739.75	724.00	1596.42	662.00	1459.71	614.20	1354.31	566.50	1249.13	524.30	1156.08	452.90	998.64	394.40	869.65
deflection	66.20	2.58	79.80	3.11	94.00	3.67	110.50	4.31	127.30	4.96	145.50	5.67	185.90	7.25	232.00	9.05
two point load	574.00	1265.67	532.00	1173.06	491.00	1082.66	451.00	994.46	421.00	928.31	393.30	867.23	339.70	749.04	295.80	652.24
deflection	81.00	3.16	98.40	3.84	116.80	4.56	135.60	5.29	157.20	6.13	180.70	7.05	229.20	8.94	283.70	11.06
three point load	402.70	887.95	365.80	806.59	334.30	737.13	307.10	677.16	283.30	624.68	262.20	578.15	226.50	499.43	197.20	434.83
deflection	79.30	3.09	94.60	3.69	111.10	4.33	129.10	5.03	148.50	5.79	169.30	6.60	215.20	8.39	266.90	10.41
four point load	335.60	740.00	304.90	672.30	278.60	614.31	255.90	564.26	236.00	520.38	218.50	481.79	188.70	416.08	164.30	362.28
deflection	83.90	3.27	100.00	3.90	117.40	4.58	136.30	5.32	156.70	6.11	178.50	6.96	226.50	8.83	280.40	10.94
distributed load	146.40	98.38	121.90	81.91	102.90	69.15	87.70	58.93	75.50	50.73	65.50	44.01	50.30	33.80	39.40	26.48
deflection	83.30	3.25	99.20	3.87	116.60	4.55	135.30	5.28	155.60	6.07	177.20	6.91	224.90	8.77	278.50	10.86

STANDARD LENGHTS AND WEIGHTS AVAILABLE

	m	ft	0.50	1.64	1.00	3.28	1.50	4.92	2.00	6.56	2.50	8.20	3.00	9.84	3.50	11.48	4	13.12
RECT	kg	lbs	4.50	9.92	7.70	16.98	10.90	24.03	14.10	32.85	17.30	38.14	20.50	45.20	23.70	s52.25	26.90	59.31

Connection material (pins/clips/couplers) and packaging not included in above weights

All truss loading calculations and TUV certifications are based on:
Truss supported or suspended at both ends • Static loadings only • Loads applied in the node points • Self weight of trusses included • Spans made of different truss lengths • Interaction of bending moment and shear force at connector • Structural calculations made in 2014 are based on DIN EN 1999-1-1 and DIN EN 1999-1-1/A2 • All loading data should be multiplied by 0.85 to comply with BS 7905-2 / ANSI E12-2006 / CWA 15902-2 • For any other application, or in case of an assembled structure, contact MILOS or a Structural Engineer • Safety factors used – self weight 1.35 / loading 1.5

Strength with style

Big trusses

Strength with style

M400

- Compact, medium-duty M400 series truss range
- Square or compact rectangular format for low storage and transport volume
- Super-sized conical connections for maximum rigidity
- User-friendly tapered pin holes for ease of assembly
- Compatible with 200/400/500/600 series cell clamps
- Powder coat colour finish available on request
- Great free-span & loading characteristics (up to 20m / 65.61 ft)
- Connection kit supplied with every truss length & junction

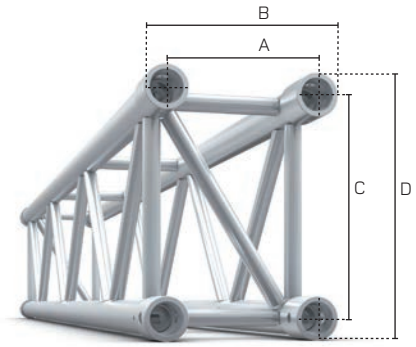

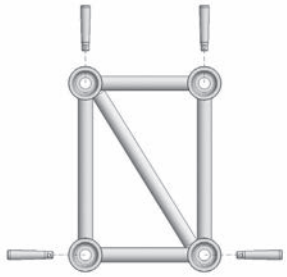

RECT

M400	Main Tubes		Braces		Alloy	A		B		C		D		Coupler
RTO	50x4mm	2"x0.16"	25x3mm	0.98"x0.12"	EN - AW 6082 T6	207mm	8.15"	266mm	10.47"	299mm	11.77"	358mm	14.10"	CCO

M400 RTO RECT — LOADING CHART

Span	m	ft	4.00	13.12	5.00	16.40	6.00	19.69	7.00	22.97	8.00	26.25	9.00	29.53	10.00	32.81
point load	kg	lbs	2349.00	5178.65	2049.00	4517.27	1792.00	3950.68	1558.90	3436.78	1355.80	2989.02	1196.90	2638.71	1069.00	2356.74
deflection	mm	inch	8.50	0.33	14.50	0.57	22.00	0.87	30.70	1.21	40.10	1.58	50.90	2.00	63.10	2.48
two point load	kg	lbs	1472.00	3245.20	1305.00	2877.03	1179.00	2599.25	1064.00	2345.72	976.00	2151.71	889.00	1959.91	801.70	1767.44
deflection	mm	inch	9.00	0.35	15.70	0.62	24.70	0.97	35.50	1.40	48.90	1.93	63.80	2.51	79.60	3.13
three point load	kg	lbs	1092.00	2407.45	1003.00	2211.23	914.10	2015.24	779.40	1718.28	677.90	1494.51	598.50	1319.47	534.50	1178.37
deflection	mm	inch	9.40	0.37	16.80	0.66	26.60	1.05	36.30	1.43	47.40	1.87	60.10	2.37	74.30	2.93
four point load	kg	lbs	875.00	1929.04	817.00	1801.17	761.70	1679.26	649.50	1431.90	564.90	1245.39	498.70	1099.44	445.40	981.94
deflection	mm	inch	9.50	0.37	17.50	0.69	28.20	1.11	38.40	1.51	50.20	1.98	63.60	2.50	78.60	3.09
distributed load	kg/m	lbs/ft	1231.10	827.26	881.30	592.21	609.40	409.50	445.40	299.29	339.00	227.80	266.00	178.74	213.80	143.67
deflection	mm	inch	11.10	0.44	19.40	0.76	28.00	1.10	38.10	1.50	49.80	1.96	63.10	2.48	78.00	3.07

Span	11.00	36.09	12.00	39.37	13.00	42.65	14.00	45.93	15.00	49.21	16.00	52.49	18.00	59.06	20.00	65.62
point load	963.50	2124.15	874.80	1928.60	799.20	1761.93	733.70	1617.53	676.30	1490.98	625.60	1379.21	539.60	1189.61	469.10	1034.19
deflection	76.50	3.01	91.40	3.60	107.70	4.24	125.40	4.94	144.50	5.69	165.20	6.50	211.20	8.31	263.60	10.38
two point load	722.60	1593.06	656.10	1446.45	599.40	1321.45	550.30	1213.20	507.30	1118.40	469.20	1034.41	404.70	892.21	351.80	775.59
deflection	96.40	3.80	114.90	4.52	134.90	5.31	156.60	6.17	179.90	7.08	205.00	8.07	260.00	10.24	321.80	12.67
three point load	481.70	1061.97	437.40	964.30	399.60	880.97	366.80	808.65	338.20	745.60	312.80	689.61	269.80	594.81	234.60	517.20
deflection	90.00	3.54	107.20	4.22	126.10	4.96	146.50	5.77	168.40	6.63	192.00	7.56	244.10	9.61	302.90	11.93
four point load	401.40	884.93	364.50	803.58	333.00	734.14	305.70	673.95	281.80	621.26	260.70	574.74	224.90	495.82	195.50	431.00
deflection	95.20	3.75	113.40	4.46	133.20	5.24	154.60	6.09	177.70	7.00	202.40	7.97	256.90	10.11	318.10	12.52
distributed load	175.20	117.73	145.80	97.97	122.90	82.58	104.80	70.42	90.20	60.61	78.20	52.55	60.00	40.32	46.90	31.52
deflection	94.40	3.72	112.50	4.43	132.20	5.20	153.50	6.04	176.40	6.94	201.00	7.91	255.10	10.04	316.00	12.44

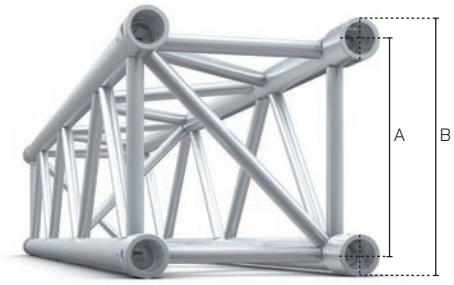

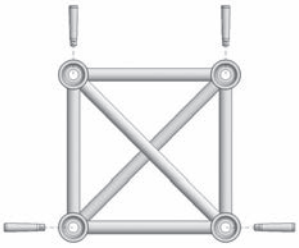

QUATRO

M400	Main Tubes		Braces		Alloy	A		B		Coupler
QTO	50x4mm	2"x0.16"	25x3mm	0.98"x0.12"	EN - AW 6082 T6	299mm	11.77"	358mm	14.10"	CCO

M400 QTO QUATRO — LOADING CHART

Span	m	ft	4.00	13.12	5.00	16.40	6.00	19.69	7.00	22.97	8.00	26.25	9.00	29.53	10.00	32.81
point load	kg	lbs	2348.00	5176.45	2048.00	4515.06	1790.00	3946.27	1556.60	3431.71	1353.30	2983.51	1194.10	2632.54	1065.80	2349.68
deflection	mm	inch	8.50	0.33	14.50	0.57	22.10	0.87	30.70	1.21	40.20	1.58	51.00	2.01	63.10	2.48
two point load	kg	lbs	1471.00	3243.00	1305.00	2877.03	1178.00	2597.04	1062.00	2341.31	964.00	2125.25	887.00	1955.50	799.30	1762.15
deflection	mm	inch	9.00	0.35	15.70	0.62	24.70	0.97	35.50	1.40	48.40	1.91	63.90	2.52	79.70	3.14
three point load	kg	lbs	1091.00	2405.24	1002.00	2209.03	913.10	2013.04	778.30	1715.86	676.60	1491.65	597.00	1316.16	532.90	1174.84
deflection	mm	inch	9.40	0.37	16.80	0.66	26.60	1.05	36.30	1.43	47.40	1.87	60.10	2.37	74.30	2.93
four point load	kg	lbs	875.00	587.97	816.00	548.33	760.90	511.30	648.60	435.84	563.90	378.92	497.50	334.30	444.10	298.42
deflection	mm	inch	9.50	0.37	17.50	0.69	28.20	1.11	38.40	1.51	50.20	1.98	63.60	2.50	78.60	3.09
distributed load	kg/m	lbs/ft	1230.50	2712.78	880.70	1941.61	608.70	1341.95	444.70	980.39	338.30	745.82	265.30	584.89	213.20	470.02
deflection	mm	inch	11.10	0.44	19.40	0.76	28.00	1.10	38.10	1.50	49.80	1.96	63.10	2.48	78.00	3.07

Span	11.00	36.09	12.00	39.37	13.00	42.65	14.00	45.93	15.00	49.21	16.00	52.49	18.00	59.06	20.00	65.62
point load	959.90	2116.21	871.00	1920.22	795.00	1752.67	729.20	1607.61	671.50	1480.40	620.50	1367.97	533.90	1177.05	462.70	1020.08
deflection	76.60	3.02	91.60	3.61	107.90	4.25	125.60	4.94	144.90	5.70	165.70	6.52	211.90	8.34	264.70	10.42
two point load	720.00	1587.33	653.20	1440.06	596.20	1314.39	546.90	1205.71	503.60	1110.25	465.40	1026.03	400.40	882.73	347.00	765.00
deflection	96.50	3.80	114.90	4.52	135.00	5.31	156.70	6.17	180.00	7.09	205.10	8.07	260.20	10.24	322.10	12.68
three point load	480.00	1058.22	435.50	960.11	397.50	876.34	364.60	803.80	335.80	740.31	310.20	683.87	266.90	588.41	231.30	509.93
deflection	90.00	3.54	107.30	4.22	126.20	4.97	146.60	5.77	168.60	6.64	192.30	7.57	244.50	9.63	303.50	11.95
four point load	400.00	268.79	362.90	243.86	331.20	222.56	303.80	204.14	279.80	188.02	258.50	173.70	222.40	149.45	192.80	129.56
deflection	95.20	3.75	113.40	4.46	133.20	5.24	154.70	6.09	177.80	7.00	202.60	7.98	257.10	10.12	318.40	12.54
distributed load	174.50	384.71	145.20	320.11	122.30	269.63	104.20	229.72	89.50	197.31	77.60	171.08	59.30	130.73	46.30	102.07
deflection	94.50	3.72	112.60	4.43	132.30	5.21	153.60	6.05	176.50	6.95	201.10	7.92	255.40	10.06	316.40	12.46

STANDARD LENGTHS AND WEIGHTS AVAILABLE

	m	ft	0.50	1.64	1.00	3.28	1.50	4.92	2.00	6.56	2.50	8.20	3.00	9.84	4.00	13.12
RECT	kg	lbs	6.70	14.9	10.70	23.77	14.70	32.58	18.50	40.81	22.50	49.61	26.50	58.42	33.90	74.87
QUATRO	kg	lbs	7.40	16.31	11.90	26.37	16.40	36.31	20.80	45.88	25.30	55.84	30.00	66.25	38.50	85.01

Connection material (pins/clips/couplers) and packaging not included in above weights

All truss loading calculations and TUV certifications are based on:
Truss supported or suspended at both ends • Static loadings only • Loads applied in the node points • Self weight of trusses included • Spans made of different truss lengths • Interaction of bending moment and shear force at connector • Structural calculations made in 2014 are based on DIN EN 1999-1-1 and DIN EN 1999-1-1/A2 • All loading data should be multiplied by 0.85 to comply with BS 7905-2 / ANSI E12-2006 / CWA 15902-2 • For any other application, or in case of an assembled structure, contact MILOS or a Structural Engineer • Safety factors used – self weight 1.35 / loading 1.5

Suspend your great ideas

M520

- High-capacity M520 series truss range
- Square or compact folding formats available
- Super-sized conical connections for maximum rigidity
- User-friendly tapered pin holes for ease of assembly
- Great free-span & loading characteristics (up to 24m / 78.74 ft)
- Connection kit supplied with every truss length & junction
- Compatible with 200/400/500/600 series cell clamps
- Powder coat colour finish available on request

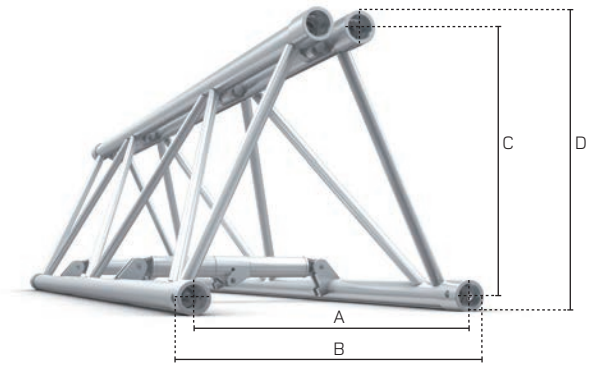

FOLD

M520	Main Tubes		Braces		Alloy	A		B		C		D		Coupler
FTP	50x4mm	2"x0.16"	25x3mm	0.98"x0.12"	EN - AW 6082 T6	520mm	20.47"	579mm	22.80"	470mm	18.50"	529mm	20.83"	CCO

M520 FTP FOLD												LOADING CHART
Span	**m**	**ft**	**4.00**	**13.12**	**6.00**	**19.69**	**8.00**	**26.25**	**10.00**	**32.81**	**12.00**	**39.37**
point load	kg	lbs	2584.90	5698.72	2308.00	5088.26	1927.00	4248.30	1627.00	3586.92	1393.70	3072.58
deflection	mm	inch	3.80	0.15	11.60	0.46	23.20	0.91	38.80	1.53	58.40	2.30
two point load	kg	lbs	1292.40	2849.25	1282.30	2826.98	1221.00	2691.84	1073.00	2365.56	951.00	2096.59
deflection	mm	inch	3.30	0.13	11.00	0.43	25.00	0.98	43.40	1.71	67.30	2.65
three point load	kg	lbs	861.60	1899.50	854.90	1884.73	848.20	1869.96	841.40	1854.97	696.90	1536.40
deflection	mm	inch	3.00	0.12	10.20	0.40	24.20	0.95	47.30	1.86	68.70	2.70
four point load	kg	lbs	646.20	1424.63	641.20	1413.60	636.10	1402.36	631.10	1391.34	580.70	1280.22
deflection	mm	inch	2.90	0.11	9.80	0.39	23.20	0.91	45.20	1.78	72.70	2.86
distributed load	kg/m	lbs/ft	646.20	434.23	427.40	287.20	318.10	213.75	252.40	169.60	208.70	140.24
deflection	mm	inch	2.40	0.09	8.10	0.32	19.30	0.76	37.70	1.48	65.10	2.56

Span	**14.00**	**45.93**	**16.00**	**52.49**	**18.00**	**59.06**	**20.00**	**65.62**	**22.00**	**72.18**	**24.00**	78.74
point load	1175.90	2592.41	1010.00	2226.67	878.70	1937.20	771.60	1701.08	682.20	1503.99	606.00	1336.00
deflection	79.90	3.15	105.00	4.13	133.90	5.27	166.70	6.56	203.50	8.01	244.60	9.63
two point load	855.00	1884.95	757.50	1670.00	659.00	1452.84	578.70	1275.81	511.70	1128.10	454.50	1002.00
deflection	97.50	3.84	131.30	5.17	166.40	6.55	205.90	8.11	249.60	9.83	297.80	11.72
three point load	587.90	1296.10	505.00	1113.33	439.30	968.49	385.80	850.54	341.10	752.00	303.00	668.00
deflection	93.70	3.69	122.80	4.83	155.90	6.14	193.10	7.60	234.60	9.24	280.50	11.04
four point load	489.90	1080.04	420.80	927.70	366.10	807.11	321.50	708.79	284.30	626.77	252.50	556.67
deflection	99.10	3.90	129.60	5.10	164.40	6.47	203.40	8.01	246.70	9.71	294.40	11.59
distributed load	168.00	112.89	126.20	84.80	97.60	65.58	77.20	51.88	62.00	41.66	50.50	33.93
deflection	98.30	3.87	128.70	5.07	163.20	6.43	202.00	7.95	245.00	9.65	292.40	11.51

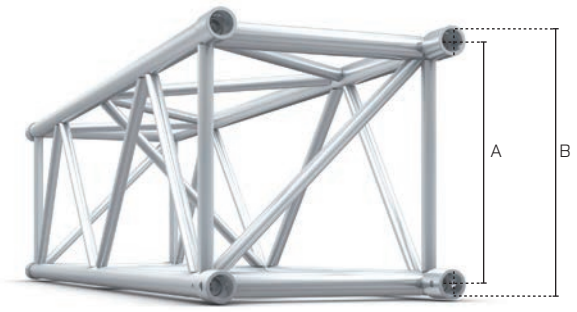

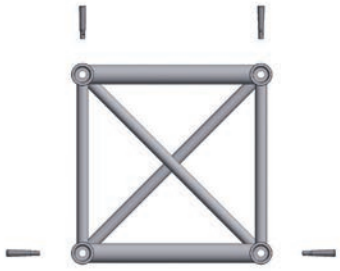

QUATRO

M520	Main Tubes		Braces		Alloy	A		B		Coupler
QTP	50x4mm	2"x0.16"	30x3mm	1.81"x0.12"	EN - AW 6082 T6	470mm	18.50"	529mm	20.83"	CCO

M520 QTP QUATRO — LOADING CHART

Span	m	ft	6.00	19.69	8.00	26.25	10.00	32.81	12.00	39.37	14.00	45.93	16.00	52.49
point load	kg	lbs	2367.00	5218.34	1956.00	4312.24	1652.00	3642.03	1402.30	3091.54	1184.90	2612.25	1019.60	2247.83
deflection	mm	inch	11.80	0.46	23.40	0.92	39.00	1.54	58.10	2.29	79.60	3.13	104.50	4.11
two point load	kg	lbs	1451.00	3198.90	1257.00	2771.21	1098.00	2420.67	968.00	2134.07	862.00	1900.38	764.70	1685.87
deflection	mm	inch	12.30	0.48	25.60	1.01	44.00	1.73	67.80	2.67	97.30	3.83	130.90	5.15
three point load	kg	lbs	1083.00	2387.60	967.00	2131.87	851.50	1877.23	701.20	1545.88	592.50	1306.24	509.80	1123.92
deflection	mm	inch	12.80	0.50	27.40	1.08	47.50	1.87	68.50	2.70	93.40	3.68	122.40	4.82
four point load	kg	lbs	866.00	1909.20	797.00	1757.08	709.60	1564.40	584.30	1288.16	493.70	1088.42	424.80	936.52
deflection	mm	inch	13.10	0.52	28.70	1.13	50.30	1.98	72.50	2.85	98.80	3.89	129.20	5.09
distributed load	kg/m	lbs/ft	817.20	549.13	537.30	361.05	340.60	228.87	233.70	157.04	169.30	113.76	127.50	85.68
deflection	mm	inch	15.20	0.60	31.90	1.26	49.90	1.96	71.90	2.83	98.10	3.86	128.30	5.05

Span	18.00	59.06	20.00	65 62	22.00	72.18	24.00	78.74	26.00	85.30	28.00	91.86	30.00	98.43
point load	889.00	1959.91	782.70	1725.56	694.00	1530.01	618.60	1363.78	553.40	1220.04	496.10	1093.71	445.30	981.72
deflection	133.20	5.24	165.70	6.52	202.10	7.96	242.70	9.56	287.60	11.32	336.90	13.26	391.00	15.39
two point load	666.80	1470.04	587	1294.11	520.50	1147.50	463.90	1022.72	415.00	914.92	372.10	820.34	334.00	736.34
deflection	166.00	6.54	205.20	8.08	248.80	9.80	296.70	11.68	349.00	13.74	405.80	15.98	467.00	18.39
three point load	444.50	979.95	391.30	862.67	347.00	765.00	309.30	681.89	276.70	610.02	248.10	546.97	222.70	490.97
deflection	155.30	6.11	192.40	7.57	233.60	9.20	279.20	10.99	329.10	12.96	383.40	15.09	442.30	17.41
four point load	370.40	816.59	326.10	718.93	289.20	637.58	257.70	568.13	230.60	508.39	206.70	455.69	185.60	409.18
deflection	163.90	6.45	202.70	7.98	245.80	9.68	293.30	11.55	345.10	13.59	401.40	15.80	462.20	18.20
distributed load	98.80	66.39	78.30	52.62	63.10	42.40	51.50	34.61	42.60	28.63	35.40	23.79	29.70	19.96
deflection	162.70	6.41	201.30	7.93	244.20	9.61	291.30	11.47	342.90	13.50	398.90	15.70	459.40	18.09

STANDARD LENGTHS AND WEIGHTS AVAILABLE

	m	ft	1.00	3.28	1.20	3.94	1.50	4.92	1.60	5.25	2.00	6.56	2.40	7.87	2.50	8.20	3.00	9.84	3.50	11.48	4.00	13.12
FOLD	kg	lbs	13.40	29.54	14.50	32.03	-	-	13.40	29.54	14.50	32.03	29.10	62.83	-	-	32.00	70.55	-	-	-	-
QUATRO	kg	lbs	17.00	37.48	18.40	40.70	21.70	47.97	-	-	27.60	60.85	31.60	69.69	33.00	72.75	38.30	84.44	44.00	97.00	49.00	108.03

Connection material (pins/clips/couplers) and packaging not included in above weights

All truss loading calculations and TUV certifications are based on:
Truss supported or suspended at both ends • Static loadings only • Loads applied in the node points • Self weight of trusses included • Spans made of different truss lengths • Interaction of bending moment and shear force at connector • Structural calculations made in 2014 are based on DIN EN 1999-1-1 and DIN EN 1999-1-1/A2 • All loading data should be multiplied by 0.85 to comply with BS 7905-2 / ANSI E12-2006 / CWA 15902-2 • For any other application, or in case of an assembled structure, contact MILOS or a Structural Engineer • Safety factors used – self weight 1.35 / loading 1.5

Suspend your great ideas

M760

- NEW high-capacity M760 series truss range
- Super-sized conical connections for maximum rigidity
- User-friendly tapered pin holes for ease of assembly
- Great free-span & loading characteristics (up to 30m / 98.43 ft)
- Connection kit supplied with every truss length & junction
- Compatible with 200/400/500/600 series cell clamps
- Powder coat colour finish available on request

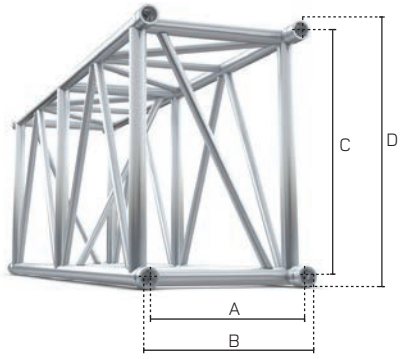

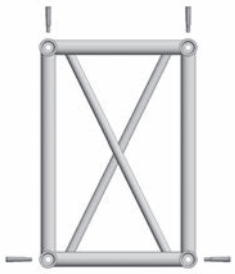

RECT

M760	Main Tubes		Braces		Alloy	A		B		C		D		Coupler
RTP	50x4mm	2"x0.16"	30x3mm	1.18"x0.12"	EN - AW 6082 T6	470mm	18.50"	520mm	20.47"	712mm	28.03"	762mm	30.00"	CCO

M760 RTP RECT — LOADING CHART

Span	m	ft	6.00	19.69	8.00	26.25	10.00	32.81	12.00	39.37	14.00	45.93	16.00	52.49
point load	kg	lbs	4279.70	9435.11	3238.20	7139.00	2557.50	5638.32	2097.60	4624.41	1763.90	3888.73	1509.00	3326.77
deflection	mm	inch	9.40	0.37	17.00	0.67	26.70	1.05	38.70	1.52	53.00	2.09	69.80	2.75
two point load	kg	lbs	2139.90	4717.67	2121.50	4677.10	1918.20	4228.90	1573.20	3468.31	1322.90	2916.49	1131.80	2495.19
deflection	mm	inch	8.00	0.31	18.90	0.74	33.80	1.33	48.70	1.92	66.40	2.61	86.80	3.42
three point load	kg	lbs	1426.60	3145.11	1414.30	3117.99	1278.80	2819.27	1048.80	2312.21	882.00	1944.47	754.50	1663.39
deflection	mm	inch	7.40	0.29	17.60	0.69	31.50	1.24	45.40	1.79	62.00	2.44	81.30	3.20
four point load	kg	lbs	1069.90	2358.72	1060.80	2338.66	1051.60	2318.38	874.00	1926.84	735.00	1620.40	628.80	1386.27
deflection	mm	inch	7.10	0.28	16.80	0.66	32.90	1.30	48.00	1.89	65.50	2.58	85.70	3.37
distributed load	kg/m	lbs/ft	713.30	479.32	530.40	356.41	420.60	282.63	347.50	233.51	252.00	169.34	188.60	126.73
deflection	mm	inch	5.90	0.23	14.00	0.55	27.40	1.08	47.40	1.87	65.00	2.56	85.10	3.35

Span	18.00	59.06	20.00	65.62	22.00	72.18	24.00	78.74	26.00	85.30	28.00	91.86	30.00	98.43
point load	1306.70	2880.78	1141.20	2515.91	1002.40	2209.91	883.70	1948.22	780.40	1720.49	689.30	1519.64	607.90	1340.19
deflection	89.10	3.51	111.00	4.37	135.80	5.35	163.50	6.44	194.30	7.65	228.30	8.99	265.80	10.46
two point load	980.00	2160.53	855.90	1886.93	751.80	1657.43	662.80	1461.22	585.30	1290.36	517.00	1139.79	455.90	1005.09
deflection	110.10	4.33	136.20	5.36	165.30	6.51	197.20	7.76	232.20	9.14	270.10	10.63	311.10	12.25
three point load	653.30	1440.28	570.60	1257.96	501.20	1104.96	441.80	974.00	390.20	860.24	344.60	759.71	303.90	669.98
deflection	103.30	4.07	128.10	5.04	155.70	6.13	186.30	7.33	219.80	8.65	256.50	10.10	296.40	11.67
four point load	544.50	1200.42	475.50	10 48.30	417.70	920.87	368.20	811.74	325.20	716.94	287.20	633.17	253.30	558.43
deflection	108.80	4.28	134.60	5.30	163.40	6.43	195.10	7.68	229.70	9.04	267.40	10.53	308.20	12.13
distributed load	145.20	97.57	114.10	76.67	91.10	61.22	73.60	49.46	60.00	40.32	49.20	33.06	40.50	27.21
deflection	108.00	4.25	133.70	5.26	162.30	6.39	193.90	7.63	228.40	8.99	265.90	10.47	306.60	12.07

STANDARD LENGTHS AND WEIGHTS AVAILABLE

	m	ft	1.00	3.28	1.50	4.92	2.00	6.56	2.50	8.20	3.00	9.84	3.50	11.48	4.00	13.12
RECT	kg	lbs	22.60	49.89	33.30	73.5	37.10	81.84	47.80	105.4	51.50	113.65	62.20	137.22	65.90	145.4

Connection material (pin/clips/couplers) and packaging not included in above weights

All truss loading calculations and TUV certifications are based on:
Truss supported or suspended at both ends • Static loadings only • Loads applied in the node points • Self weight of trusses included • Spans made of different truss lengths • Interaction of bending moment and shear force at connector • Structural calculations made in 2014 are based on DIN EN 1999-1-1 and DIN EN 1999-1-1/A2 • All loading data should be multiplied by 0.85 to comply with BS 7905-2 / ANSI E12-2006 / CWA 15902-2 • For any other application, or in case of an assembled structure, contact MILOS or a Structural Engineer • Safety factors used – self weight 1.35 / loading 1.5

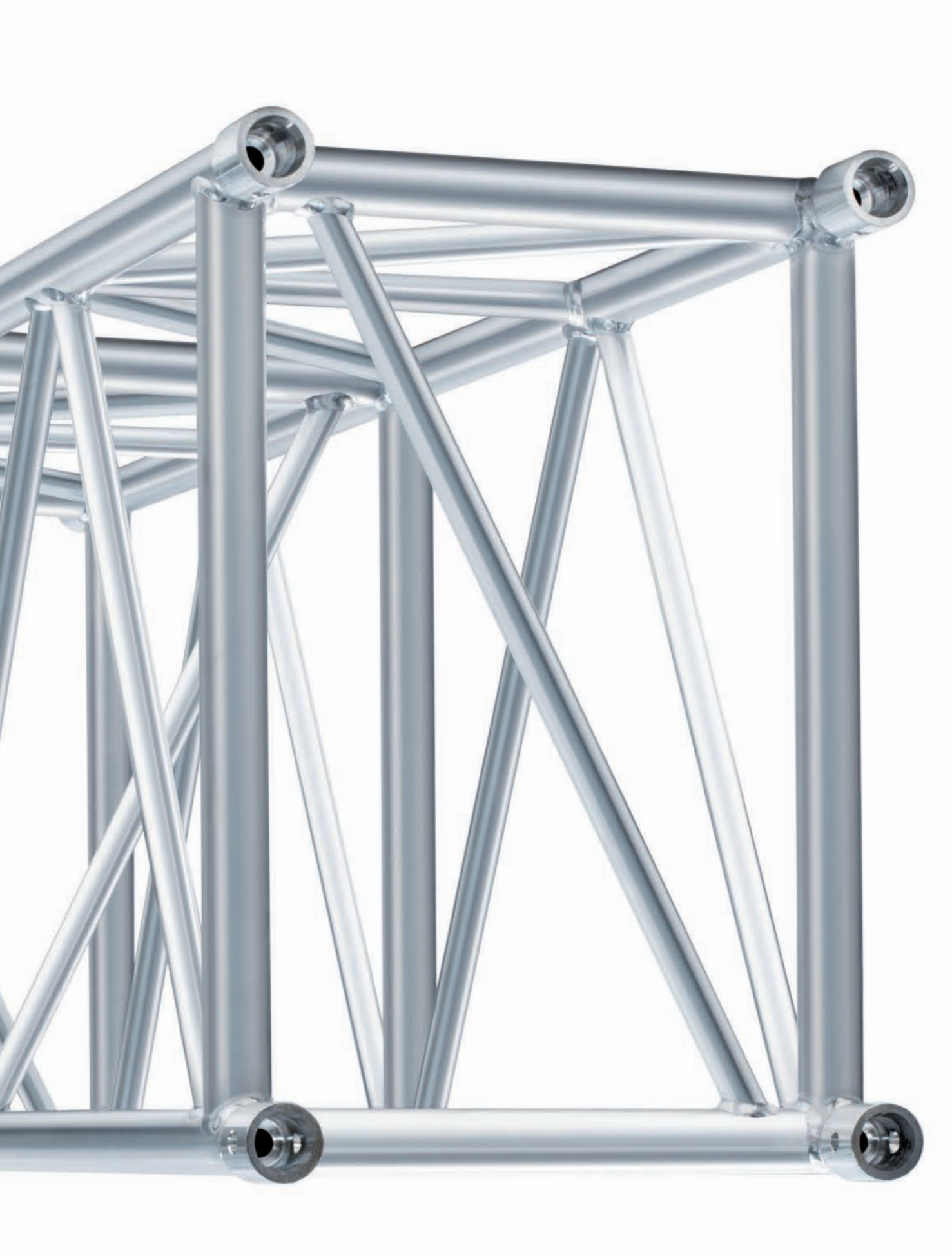

The biggest is best

M950

- New, heavy-duty RTTH available with up to 50% better SWL
- Ultra-high capacity M950 series truss range
- Great free-span & loading characteristics (up to 40m / 131.23 ft)
- Super-sized conical connections for maximum rigidity
- Transit wheels fitted for ease of transportation & setup
- User-friendly tapered pin holes for ease of assembly
- Fixed rectangular or compact folding version available
- Connection kit supplied with every truss length
- Compatible with 300 series cell clamps
- Powder coat colour finish available on request

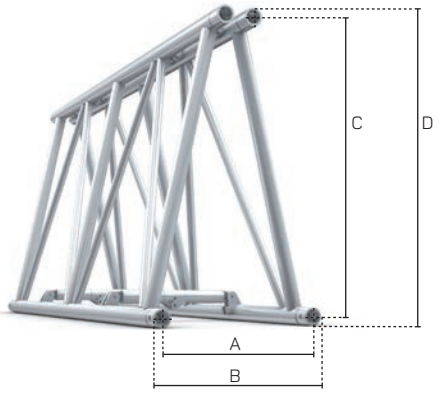

FOLD

M950	Main Tubes		Braces		Alloy	A		B		C		D		Coupler
FTT	60x6mm	2.36"x0.24"	32x3mm	1.26"x0.12"	EN - AW 6082 T6	520mm	20.47"	580mm	22.84"	940mm	37.00"	1000mm	39.37"	CCO

M950 FTT FOLD — LOADING CHART

Span	m	ft	8.00	26.25	10.00	32.81	12.00	39.37	14.00	45.93	16.00	52.49	18.00	59.06	20.00	65.62	22.00	72.18
point load	kg	lbs	3159.30	6965.06	3118.90	6875.99	3078.60	6787.14	3038.20	6698.08	2997.80	6609.01	2949.90	6503.41	2616.60	5768.61	2340.20	5159.25
deflection	mm	inch	5.40	0.21	10.60	0.42	18.20	0.72	28.80	1.13	42.80	1.69	60.50	2.38	75.10	2.96	91.40	3.60
two point load	kg	lbs	1579.60	3482.42	1559.50	3438.10	1539.30	3393.57	1519.10	3349.04	1498.90	3304.50	1478.70	3259.97	1458.50	3215.44	1438.40	3171.13
deflection	mm	inch	4.70	0.19	9.10	0.36	15.60	0.61	24.80	0.98	36.90	1.45	52.40	2.06	71.70	2.82	95.20	3.75
three point load	kg	lbs	1053.10	2321.69	1039.60	2291.92	1026.20	2262.38	1012.70	2232.62	999.30	2203.08	985.80	2173.31	972.40	2143.77	958.90	2114.01
deflection	mm	inch	4.30	0.17	8.50	0.33	14.60	0.57	23.10	0.91	34.50	1.36	49.00	1.93	67.10	2.64	89.20	3.51
four point load	kg	lbs	789.80	1741.21	779.70	1718.94	769.60	1696.68	759.50	1674.41	749.50	1652.36	739.40	1630.10	729.30	1607.83	719.20	1585.56
deflection	mm	inch	4.10	0.16	8.10	0.32	14.00	0.55	22.20	0.87	33.10	1.30	47.00	1.85	64.40	2.54	85.70	3.37
distributed load	kg/m	lbs/ft	394.90	265.36	311.90	209.59	256.50	172.36	217.00	145.82	187.40	125.93	164.30	110.40	145.90	98.04	130.80	87.89
deflection	mm	inch	3.50	0.14	6.80	0.27	11.70	0.46	18.60	0.73	27.80	1.09	39.70	1.56	54.50	2.15	72.70	2.86

Span	24.00	78.74	26.00	85.30	28.00	91.86	30.00	98.43	32.00	104.99	34.00	111.55	36.00	118.11	38.00	124.67	40.00	131.23
point load	2106.50	4644.03	1905.60	4201.12	1730.60	3815.32	1576.20	3474.92	1438.60	3171.57	1314.80	2898.63	1202.50	2651.06	1099.90	2424.86	1005.50	2216.75
deflection	109.40	4.31	129.30	5.09	151.00	5.94	174.70	6.88	200.40	7.89	228.20	8.98	258.10	10.16	290.30	11.43	324.80	12.79
two point load	1418.20	3126.59	1398.00	3082.06	1297.90	2861.38	1182.10	2606.08	1078.90	2378.56	986.10	2173.98	901.90	1988.35	824.90	1818.59	754.10	1662.50
deflection	123.30	4.85	156.40	6.16	185.20	7.29	213.00	8.39	242.80	9.56	274.70	10.81	308.60	12.15	344.60	13.57	382.80	15.07
three point load	945.50	2084.47	932.00	2054.71	865.30	1907.66	788.10	1737.46	719.30	1585.78	657.40	1449.32	601.20	1325.42	549.90	1212.32	502.80	1108.48
deflection	115.70	4.56	146.80	5.78	174.10	6.85	200.60	7.90	229.00	9.02	259.60	10.22	292.20	11.50	327.00	12.87	364.00	14.33
four point load	709.10	1563.30	699.00	1541.03	688.90	1518.76	656.70	1447.77	599.40	1321.45	547.80	1207.69	501.00	1104.51	458.30	1010.38	419.00	923.74
deflection	111.10	4.37	141.20	5.56	176.10	6.93	210.60	8.29	240.10	9.45	271.70	10.70	305.40	12.02	341.20	13.43	379.10	14.93
distributed load	118.20	79.43	107.50	72.24	98.40	66.12	90.50	60.81	83.60	56.18	77.30	51.94	66.80	44.89	57.90	38.91	50.30	33.80
deflection	94.50	3.72	120.30	4.74	150.40	5.92	185.30	7.30	225.20	8.87	270.00	10.63	303.60	11.95	339.20	13.35	377.00	14.84

STANDARD LENGTHS AND WEIGHTS AVAILABLE

	m	ft	1.00	3.28	1.20	3.94	2.00	6.56	2.40	7.87	3.00	9.84
FOLD	kg	lbs	23.80	52.49	27.30	60.19	43.70	96.41	48.30	106.68	62.40	137.72
RECT	kg	lbs	30.70	67.73	34.30	75.64	51.90	114.51	56.70	125.16	71.60	158.05

Connection material (pins/clips/couplers) and packaging not included in above weights

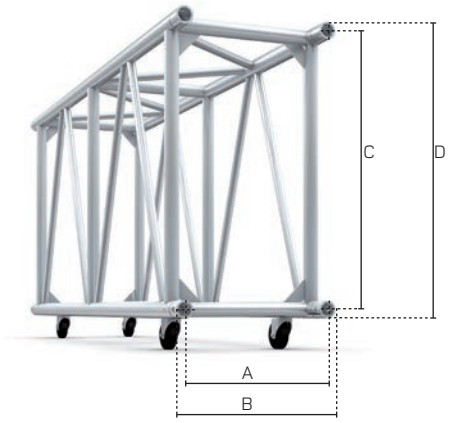

RECT

M950	Main Tubes		Braces		Alloy	A		B		C		D		Coupler
RTT	60x6mm	2.36"x0.24"	32x3mm	1.26"x0.12"	EN - AW 6082 T6	520mm	20.47"	580mm	22.84"	940mm	37.00"	1000mm	39.37"	CCO
RTTH	60x6mm	2.36"x0.24"	48x3mm	1.89"x0.12"	EN - AW 6082 T6	520mm	20.47"	580mm	22.84"	940mm	37.00"	1000mm	39.37"	CCO

M950 RTT RECT — LOADING CHART

Span	m	ft	8.00	26.25	10.00	32.81	12.00	39.37	14.00	45.93	16.00	52.49	18.00	59.06	20.00	65.62	22.00	72.18
point load	kg	lbs	3547.20	7820.23	3501.30	7719.04	3455.40	7617.84	3307.00	7290.68	3006.00	6627.09	2779.00	6126.64	2537.00	5593.12	2309.90	5092.45
deflection	mm	inch	6.10	0.24	11.90	0.47	20.40	0.80	31.40	1.24	43.30	1.70	57.90	2.28	74.00	2.91	91.80	3.61
two point load	kg	lbs	1773.60	3910.11	1750.60	3859.41	1727.70	3808.92	1704.80	3758.44	1681.80	3707.73	1658.90	3657.24	1636.00	3606.76	1597.0	3520.78
deflection	mm	inch	5.20	0.20	10.20	0.40	17.60	0.69	27.80	1.09	41.40	1.63	58.80	2.31	80.50	3.17	106.00	4.17
three point load	kg	lbs	1182.40	2606.74	1167.10	2573.01	1151.80	2539.28	1136.50	2505.55	1121.20	2471.82	1105.90	2438.09	1090.60	2404.36	1075.40	2370.85
deflection	mm	inch	4.90	0.19	9.50	0.37	16.40	0.65	26.00	1.02	38.70	1.52	55.10	2.17	75.40	2.97	100.20	3.94
four point load	kg	lbs	886.80	1955.06	875.30	1929.70	863.90	1904.57	852.40	1879.22	840.90	1853.86	829.50	1828.73	8180	1803.38	806.50	1778.03
deflection	mm	inch	4.70	0.19	9.10	0.36	15.70	0.62	24.90	0.98	37.10	1.46	52.80	2.08	72.40	2.85	96.30	3.79
distributed load	kg/m	lbs/ft	443.40	297.95	350.10	235.26	288.00	193.53	243.50	163.62	210.20	141.25	184.30	123.84	163.60	109.93	146.60	98.51
deflection	mm	inch	3.90	0.15	7.60	0.30	13.20	0.52	20.90	0.82	31.30	1.23	44.60	1.76	61.30	2.41	81.70	3.22

Span	24.00	78.74	26.00	85.30	28.00	91.86	30.00	98.43	32.00	104.99	34.00	111.55	36.00	118.11	38.00	124.67	40.00	131.23
point load	2073.40	4571.06	1869.80	4122.20	1692.00	3730.22	1534.90	3383.87	1394.50	3074.34	1268.00	2795.46	1152.90	2541.71	1047.60	2309.56	950.50	2095.49
deflection	110.00	4.33	130.10	5.12	152.10	5.99	176.10	6.93	202.20	7.96	230.50	9.07	261.00	10.28	293.90	11.57	329.30	12.96
two point load	1493.00	3291.50	1402.40	3091.76	1269.00	2797.66	1151.20	2537.96	1045.90	2305.81	951.00	2096.59	864.70	1906.33	785.70	1732.17	712.90	1571.67
deflection	131.10	5.16	159.70	6.29	185.50	7.30	213.40	8.40	243.40	9.58	275.40	10.84	309.50	12.19	345.70	13.61	3840	15.12
three point load	1036.70	2285.53	934.90	2061.10	846.00	1865.11	767.40	1691.83	697.30	1537.28	634.00	1397.73	576.50	1270.96	523.80	1154.78	475.20	1047.64
deflection	127.40	5.02	150.10	5.91	174.70	6.88	201.30	7.93	230.00	9.06	260.80	10.27	293.70	11.56	328.90	12.95	366.20	14.42
four point load	795.00	1752.67	779.10	1717.62	705.00	1554.26	639.50	1409.85	581.10	1281.10	528.30	1164.70	480.40	1059.10	436.50	962.32	396.00	873.03
deflection	124.80	4.91	157.80	6.21	183.40	7.22	211.00	8.31	240.70	9.48	272.50	10.73	306.40	12.06	342.40	13.48	380.50	14.98
distributed load	132.50	89.04	120.60	81.04	110.30	74.12	101.40	68.14	87.20	58.60	74.60	50.13	64.10	43.07	55.10	37.03	47.50	31.92
deflection	106.20	4.18	135.20	5.32	169.10	6.66	208.20	8.20	239.20	9.42	270.90	10.67	304.60	11.99	340.50	13.41	378.60	14.91

M950 RTTH RECT HD — LOADING CHART

Span	m	ft	8.00	26.25	10.00	32.81	12.00	39.37	14.00	45.93	16.00	52.49	18.00	59.06	20.00	65.62	22.00	72.18
point load	kg	lbs	5702.00	12570.74	5025.00	11078.22	4469.00	9852.45	3865.70	8522.40	3339.50	7362.33	2925.10	6448.73	2589.00	5707.76	2309.90	5092.45
deflection	mm	inch	9.70	0.38	16.80	0.66	26.10	1.03	36.40	1.43	47.70	1.88	60.70	2.39	75.40	2.97	91.80	3.61
two point load	kg	lbs	3442.00	7588.30	3148.00	6940.14	2873.00	6333.87	2609.00	5751.85	2404.00	5299.91	2193.90	4836.72	1941.80	4280.93	1732.40	3819.28
deflection	mm	inch	9.90	0.39	17.90	0.70	28.50	1.12	41.50	1.63	57.80	2.28	76.10	3.00	94.00	3.70	113.90	4.48
three point load	kg	lbs	2504.00	5520.37	2319.00	5112.51	2166.00	4775.21	1932.90	4261.31	1669.80	3681.27	1462.60	3224.48	1294.50	2853.88	1154.90	2546.12
deflection	mm	inch	10.10	0.40	18.40	0.72	29.90	1.18	42.80	1.69	56.00	2.20	71.10	2.80	88.00	3.46	106.70	4.20
four point load	kg	lbs	1970.00	4343.10	1864.00	4109.41	1767.00	3895.56	1610.70	3550.98	1391.50	3067.73	1218.80	2686.99	1078.80	2378.34	962.50	2121.95
deflection	mm	inch	10.10	0.40	18.80	0.74	31.00	1.22	45.30	1.78	59.20	2.33	75.10	2.96	92.80	3.65	112.50	4.43
distributed load	kg/m	lbs/ft	1483.70	997.00	1104.40	742.12	760.00	510.70	552.20	371.06	417.40	280.48	325.00	218.39	258.90	173.97	210.00	141.11
deflection	mm	inch	12.50	0.49	22.90	0.90	33.00	1.30	45.00	1.77	58.80	2.31	74.50	2.93	92.20	3.63	111.70	4.40

Span	24.00	78.74	26.00	85.30	28.00	91.86	30.00	98.43	32.00	104.99	34.00	111.55	36.00	118.11	38.00	124.67	40.00	131.23
point load	2073.40	4571.06	1869.80	4122.20	1692.00	3730.22	1534.90	3383.87	1394.50	3074.34	1268.00	2795.46	1152.90	2541.71	1047.60	2309.56	950.50	2095.49
deflection	110.00	4.33	130.10	5.12	152.10	5.99	176.10	6.93	202.20	7.96	230.50	9.07	261.00	10.28	293.90	11.57	329.30	12.96
two point load	1555.10	3428.40	1402.40	3091.76	1269.00	2797.66	1151.20	2537.96	1045.90	2305.81	951.00	2096.59	864.70	1906.33	785.70	1732.17	712.90	1571.67
deflection	135.80	5.35	159.70	6.29	185.50	7.30	213.40	8.40	243.40	9.58	275.40	10.84	309.50	12.19	345.70	13.61	384.00	15.12
three point load	1036.70	2285.53	934.90	2061.10	846.00	1865.11	767.40	1691.83	697.30	1537.28	634.00	1397.73	576.50	1270.96	523.80	1154.78	475.20	1047.64
deflection	127.40	5.02	150.10	5.91	174.70	6.88	201.30	7.93	230.00	9.06	260.80	10.27	293.70	11.56	328.90	12.95	366.20	14.42
four point load	863.90	1904.57	779.10	1717.62	705.00	1554.26	639.50	1409.85	581.10	1281.10	528.30	1164.70	480.40	1059.10	436.50	962.32	396.00	873.03
deflection	134.20	5.28	157.80	6.21	183.40	7.22	211.00	8.31	240.70	9.48	272.50	10.73	306.40	12.06	342.40	13.48	380.50	14.98
distributed load	172.80	116.12	143.80	96.63	120.90	81.24	102.30	68.74	87.20	58.60	74.60	50.13	64.10	43.07	55.10	37.03	47.50	31.92
deflection	133.20	5.24	156.70	6.17	182.20	7.17	209.70	8.26	239.20	9.42	270.90	10.67	304.60	11.99	340.50	13.41	378.60	14.91

All truss loading calculations and TUV certifications are based on:
Truss supported or suspended at both ends • Static loadings only • Loads applied in the node points • Self weight of trusses included • Spans made of different truss lengths • Interaction of bending moment and shear force at connector • Structural calculations made in 2014 are based on DIN EN 1999-1-1 and DIN EN 1999-1-1/A2 • All loading data should be multiplied by 0.85 to comply with BS 7905-2 / ANSI E12-2006 / CWA 15902-2 • For any other application, or in case of an assembled structure, contact MILOS or a Structural Engineer • Safety factors used – self weight 1.35 / loading 1.5

Suspend your great ideas

4GS-35 & 4GS-50

- Medium-duty truss range
- Wide range of standard lengths & accessories
- 4GS-35 with great free-span & loading characteristics (up to 20m / 65.61 ft)
- 4GS-50 with great free-span & loading characteristics (up to 30m / 98.43 ft)
- All components supplied complete with connection accessories
- Compatible with 200/400/500/600 series cell clamps
- Powder coat colour finish available on request

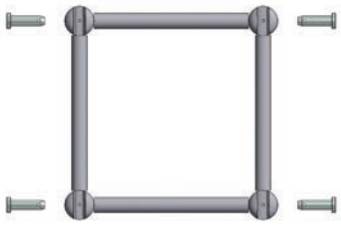

4GS-35

4GS-35	Main Tubes		Braces		Alloy	A		B		Connection
	48x4.5mm	1.89"x0.18"	25x3mm	0.98"x0.12"	EN - AW 6082 T6	299mm	11.77"	347mm	13.66"	Fork/Pin

4GS-35																		LOADING CHART
Span		m	ft	4.00	13.12	6.00	19.69	8.00	26.25	10.00	32.81	12.00	39.37	14.00	45.93	16.00	52.49	18.00	59.06
point load		kg	lbs	2938.80	6478.94	1942.40	4282.25	1439.10	3172.67	1133.10	2498.05	925.80	2041.04	774.80	1708.14	659.00	1452.84	566.70	1249.36
deflection		mm	inch	10.00	0.39	22.50	0.89	40.20	1.58	63.20	2.49	91.70	3.61	125.90	4.96	166.00	6.54	212.30	8.36
two point load		kg	lbs	2204.10	4859.20	1456.80	3211.69	1079.30	2379.45	849.90	1873.71	694.30	1530.67	581.10	1281.10	494.30	1089.74	425.00	936.96
deflection		mm	inch	12.70	0.50	28.60	1.13	51.00	2.01	79.80	3.14	115.00	4.53	156.90	6.18	205.40	8.09	260.60	10.26
three point load		kg	lbs	1469.40	3239.47	971.20	2141.13	719.60	1586.44	566.60	1249.14	462.90	1020.52	387.40	854.07	329.50	726.42	283.40	624.79
deflection		mm	inch	11.80	0.46	26.70	1.05	47.50	1.87	74.40	2.93	107.50	4.23	146.80	5.78	192.60	7.58	244.90	9.64
four point load		kg	lbs	1210.10	2667.81	809.30	1784.20	599.60	1321.89	472.10	1040.80	385.70	850.32	322.80	711.65	274.60	605.39	236.10	520.51
deflection		mm	inch	12.40	0.49	28.30	1.11	50.30	1.98	78.70	3.10	113.50	4.47	154.90	6.10	202.80	7.98	257.50	10.14
distributed load		kg/m	lbs/ft	1210.10	813.15	647.50	435.10	359.80	241.77	226.60	152.27	154.30	103.68	110.70	74.39	82.40	55.37	63.00	42.33
deflection		mm	inch	10.30	0.41	28.00	1.10	49.90	1.96	78.10	3.07	112.70	4.44	153.80	6.06	201.40	7.93	255.70	10.07

STANDARD LENGTHS AND WEIGHTS AVAILABLE

	m	ft	0.39	1.28	0.67	2.18	1.24	4.08	1.82	5.97	2.40	7.87	3.00	9.84	3.56	11.66	4.14	13.58
4GS-35	kg	lbs	8.00	17.64	8.70	19.36	15.50	34.17	19.60	43.28	26.30	57.98	30.50	67.42	35.80	78.99	41.20	90.99

Connection material (pins/clips) and packaging not included in above weights

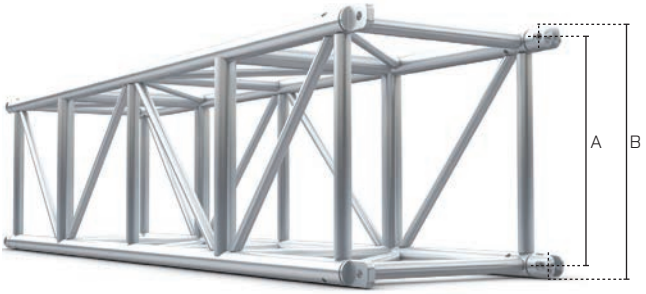

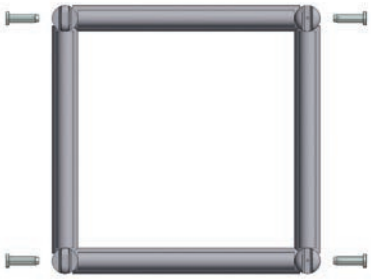

4GS-50

4GS-50	Main Tubes		Braces		Alloy	A		B		Connection
	48x4.5mm	1.89"x0.18"	25x3mm	0.98"x0.12"	EN - AW 6082 T6	452mm	17.80"	500mm	19.69"	Fork/Pin

4GS-50 LOADING CHART

Span	m	ft	4.00	13.12	6.00	19.69	8.00	26.25	10.00	32.81	12.00	39.37	14.00	45.93	16.00	52.49
point load	kg	lbs	3065.90	6759.14	2945.50	6493.71	2187.80	4823.27	1728.20	3810.02	1417.80	3125.71	1192.60	2629.23	1020.70	2250.26
deflection	mm	inch	4.60	0.18	15.00	0.59	26.70	1.05	41.90	1.65	60.70	2.39	83.20	3.28	109.50	4.31
two point load	kg	lbs	1533.00	3379.68	1520.80	3352.79	1508.60	3325.89	1296.20	2857.63	1063.40	2344.39	894.50	1972.03	765.50	1687.64
deflection	mm	inch	3.90	0.15	13.20	0.52	31.20	1.23	53.00	2.09	76.50	3.01	104.20	4.10	136.40	5.37
three point load	kg	lbs	1022.00	2253.12	1013.80	2235.04	1005.70	2217.19	864.10	1905.01	708.90	1562.86	596.30	1314.61	510.30	1125.02
deflection	mm	inch	3.60	0.14	12.30	0.48	29.10	1.15	49.40	1.94	71.40	2.81	97.40	3.83	127.70	5.03
four point load	kg	lbs	766.50	1689.84	760.40	1676.39	754.30	1662.94	720.10	1587.55	590.80	1302.49	496.90	1095.48	425.30	937.62
deflection	mm	inch	3.50	0.14	11.70	0.46	27.80	1.09	52.30	2.06	75.50	2.97	102.90	4.05	134.70	5.30
distributed load	kg/m	lbs/ft	766.50	515.06	506.90	340.62	377.10	253.40	299.30	201.12	236.30	158.79	170.40	114.50	127.60	85.74
deflection	mm	inch	2.90	0.11	9.80	0.39	23.10	0.91	45.20	1.78	74.90	2.95	102.10	4.02	133.70	5.26

Span	18.00	59.06	20.00	65.62
point load	884.20	1949.33	772.60	1703.29
deflection	139.80	5.50	174.30	6.86
two point load	663.20	1462.10	579.50	1277.58
deflection	173.00	6.81	214.00	8.43
three point load	442.10	974.66	386.30	851.64
deflection	162.20	6.39	201.10	7.92
four point load	368.40	812.18	321.90	709.67
deflection	170.90	6.73	211.50	8.33
distributed load	98.20	65.99	77.30	51.94
deflection	169.70	6.68	210.10	8.27

STANDARD LENGTHS AND WEIGHTS AVAILABLE

	m	ft	0.50	1.64	1.00	3.28	2.00	6.56	3.00	9.840	4.00	13.12
4GS-50	kg	lbs	9.60	21.3	15.10	33.29	27.40	60.54	39.80	87.77	52.10	114.99

Connection material (pins/clips) and packaging not included in above weights

All truss loading calculations and TUV certifications are based on:
Truss supported or suspended at both ends • Static loadings only • Loads applied in the node points • Self weight of trusses included • Spans made of different truss lengths • Interaction of bending moment and shear force at connector • Structural calculations made in 2014 are based on DIN EN 1999-1-1 and DIN EN 1999-1-1/A2 • All loading data should be multiplied by 0.85 to comply with BS 7905-2 / ANSI E12-2006 / CWA 15902-2 • For any other application, or in case of an assembled structure, contact MILOS or a Structural Engineer • Safety factors used – self weight 1.35 / loading 1.5

Suspend your great ideas

4GS-62 & 4GS-62F

- High capacity fork-connection series
- Square or compact folding formats available
- Great free-span & loading characteristics (up to 30m / 98.43 ft)
- All components supplied complete with connection accessories
- Wide range of standard lengths & accessories
- Compatible with 200/400/500/600 series cell clamps
- Powder coat colour finish available on request

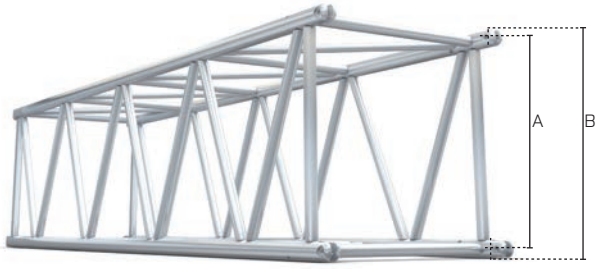

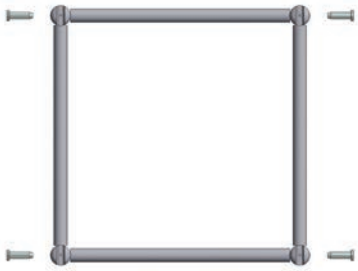

4GS-62

4GS-62	Main Tubes		Braces		Alloy	A		B		Connection
	48x4.5mm	1.89"x0.18"	25x3mm 32x3mm	0.98"x0.12" 1.26"x0.12"	EN - AW 6082 T6	569mm	22.40"	617mm	24.29"	Fork/Pin

4GS-62 — LOADING CHART

Span	m	ft	4.00	13.12	6.00	19.69	8.00	26.25	10.00	32.81	12.00	39.37	14.00	45.93	16.00	52.49	18.00	59.06
point load	kg	lbs	5605.30	12357.56	3715.50	8191.27	2764.10	6093.79	2188.20	4824.15	1799.90	3968.10	1518.90	3348.60	1305.00	2877.03	1135.70	2503.79
deflection	mm	inch	5.30	0.21	11.90	0.47	21.20	0.83	33.30	1.31	48.20	1.90	65.90	2.59	86.70	3.41	110.50	4.35
two point load	kg	lbs	3992.40	8801.72	2786.60	6143.39	2073.10	4570.40	1641.10	3618.00	1350.00	2976.24	1139.20	2511.50	978.70	2157.66	851.80	1877.90
deflection	mm	inch	6.40	0.25	15.20	0.60	27.00	1.06	42.20	1.66	60.80	2.39	82.90	3.26	108.40	4.27	137.40	5.41
three point load	kg	lbs	2661.60	5867.82	1857.70	4095.52	1382.10	3047.01	1094.10	2412.07	900.00	1984.16	759.50	1674.41	652.50	1438.51	567.90	1252.00
deflection	mm	inch	5.90	0.23	14.10	0.56	25.10	0.99	39.30	1.55	56.70	2.23	77.40	3.05	101.40	3.99	128.70	5.07
four point load	kg	lbs	1996.20	4400.86	1548.10	3412.97	1151.70	2539.06	911.70	2009.95	750.00	1653.47	632.90	1395.30	543.70	1198.65	473.20	1043.23
deflection	mm	inch	5.70	0.22	15.00	0.59	26.60	1.05	41.60	1.64	60.00	2.36	81.80	3.22	107.00	4.21	135.70	5.34
distributed load	kg/m	lbs/ft	1996.20	1341.38	1238.50	832.23	691.00	464.33	437.60	294.05	300.00	201.59	217.00	145.82	163.10	109.60	126.20	84.80
deflection	mm	inch	4.70	0.19	14.80	0.58	26.40	1.04	41.30	1.63	59.50	2.34	81.20	3.20	106.20	4.18	134.70	5.30

Span	20.00	65.62	22.00	72.18	24.00	78.74	26.00	85.30	28.00	91.86	30.00	98.43
point load	997.80	2199.77	882.50	1945.58	784.40	1729.30	699.30	1541.69	624.60	1377.01	558.10	1230.40
deflection	137.60	5.42	167.90	6.61	201.80	7.94	239.30	9.42	280.60	11.05	326.00	12.83
two point load	748.30	1649.72	661.90	1459.24	588.30	1296.98	524.50	1156.32	468.50	1032.86	418.60	922.85
deflection	170.00	6.69	206.10	8.11	245.80	9.68	289.20	11.39	336.30	13.24	387.20	15.24
three point load	498.90	1099.88	441.30	972.90	392.20	864.65	349.70	770.96	312.30	688.50	279.10	615.31
deflection	159.50	6.28	193.70	7.63	231.50	9.11	273.00	10.75	318.20	12.53	367.30	14.46
four point load	415.70	916.46	367.70	810.64	326.80	720.47	291.40	642.43	260.30	573.86	232.60	512.79
deflection	167.90	6.61	203.70	8.02	243.00	9.57	286.00	11.26	332.80	13.10	383.30	15.09
distributed load	99.80	67.06	80.20	53.89	65.40	43.95	53.80	36.15	44.60	29.97	37.20	25.00
deflection	166.70	6.56	202.30	7.96	241.40	9.50	284.20	11.19	330.70	13.02	381.00	15.00

STANDARD LENGTHS AND WEIGHTS AVAILABLE

	m	ft	1.20	3.95	1.63	5.33	2.40	7.87	3.00	9.84
4GS-62	kg	lbs	18.40	40.74	24.40	53.79	34.00	74.96	41.00	90.39

Connection material (pins/clips) and packaging not included in above weights

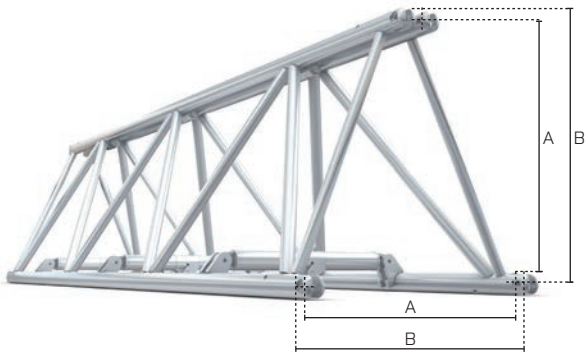

4GS-62F

4GS-62F	Main Tubes		Braces		Alloy	A		B		Connection
	48x4.5mm	1.89"x0.18"	25x3mm	0.98"x0.12"	EN - AW 6082 T6	569mm	22.40"	617mm	24.29"	Fork/Pin

4GS-62F — LOADING CHART

Span	m	ft	6.00	19.69	8.00	26.25	10.00	32.81	12.00	39.37	14.00	45.93	16.00	52.49	18.00	59.06
point load	kg	lbs	3718.20	8197.22	2767.80	6101.95	2192.80	4834.29	1805.40	3980.22	1525.40	3362.93	1312.30	2893.12	1144.00	2522.09
deflection	mm	inch	11.90	0.47	21.20	0.83	33.30	1.31	48.10	1.89	65.80	2.59	86.50	3.41	110.30	4.34
two point load	kg	lbs	2788.70	6148.02	2075.80	4576.35	1644.60	3625.72	1354.10	2985.28	1144.00	2522.09	984.30	2170.01	858.00	1891.56
deflection	mm	inch	15.20	0.60	27.00	1.06	42.20	1.66	60.80	2.39	82.80	3.26	108.40	4.27	137.40	5.41
three point load	kg	lbs	1859.10	4098.61	1383.90	3050.97	1096.40	2417.15	902.70	1990.11	762.70	1681.46	656.20	1446.67	572.00	1261.04
deflection	mm	inch	14.10	0.56	25.10	0.99	39.30	1.55	56.70	2.23	77.30	3.04	101.30	3.99	128.50	5.06
four point load	kg	lbs	1549.30	3415.62	1153.20	2542.37	913.70	2014.36	752.30	1658.54	635.60	1401.26	546.80	1205.49	476.70	1050.94
deflection	mm	inch	15.00	0.59	26.60	1.05	41.60	1.64	60.00	2.36	81.80	3.22	107.00	4.21	135.60	5.34
distributed load	kg/m	lbs/ft	1115.00	749.25	691.90	464.94	438.60	294.73	300.90	202.20	217.90	146.42	164.00	110.20	127.10	85.41
deflection	mm	inch	13.40	0.53	26.40	1.04	41.30	1.63	59.50	2.34	81.10	3.19	106.20	4.18	134.60	5.30

Span	20.00	65.62	22.00	72.18	24.00	78.74
point load	1006.90	2219.83	892.60	1967.84	795.40	1753.55
deflection	137.20	5.40	167.30	6.59	200.90	7.91
two point load	755.20	1664.93	669.50	1475.99	596.50	1315.06
deflection	169.90	6.69	205.90	8.11	245.60	9.67
three point load	503.50	1110.03	446.30	983.92	397.70	876.78
deflection	159.20	6.27	193.40	7.61	231.10	9.10
four point load	419.60	925.06	371.90	819.90	331.40	730.61
deflection	167.80	6.61	203.50	8.01	242.70	9.56
distributed load	100.70	67.67	81.10	54.50	66.30	44.55
deflection	166.60	6.56	202.10	7.96	241.10	949

STANDARD LENGTHS AND WEIGHTS AVAILABLE

	m	ft	1.20	3.94	1.63	5.33	2.40	7.87
4GS-62	kg	lbs	18.70	41.38	21.80	48.24	31.00	68.5

Connection material (pins/clips) and packaging not included in above weights

All truss loading calculations and TUV certifications are based on:
Truss supported or suspended at both ends • Static loadings only • Loads applied in the node points • Self weight of trusses included • Spans made of different truss lengths • Interaction of bending moment and shear force at connector • Structural calculations made in 2014 are based on DIN EN 1999-1-1 and DIN EN 1999-1-1/A2 • All loading data should be multiplied by 0.85 to comply with BS 7905-2 / ANSI E12-2006 / CWA 15902-2 • For any other application, or in case of an assembled structure, contact MILOS or a Structural Engineer • Safety factors used – self weight 1.35 / loading 1.5

The biggest is best

4GX-91

- Ultra-high capacity fork-connection series
- Super heavy-duty 60x6mm (2 3/8'' x 1/4'') main tube
- Great free-span & loading characteristics (up to 40m / 131.23ft)
- Transit wheels fitted for ease of transportation & setup
- All components supplied complete with connection accessories
- Compatible with 300 series cell clamps
- Powder coat colour finish available on request

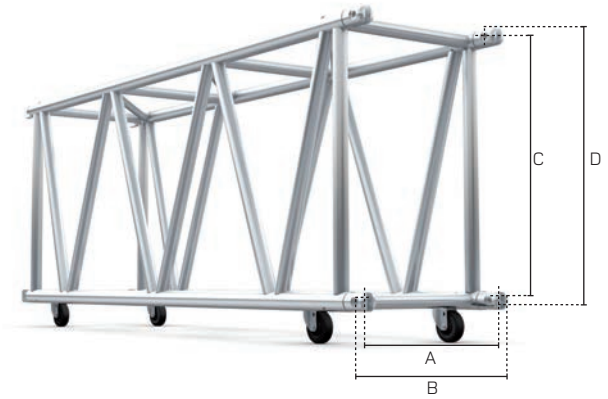

4GX-91

4GX-91	Main Tubes		Braces		Alloy	A		B		C		D		Connection
	60x6mm	2.36"x0.24"	48x4.5	1.89"x0.18"	EN - AW 6082 T6	550mm	21.65"	610mm	24.02"	854mm	33.62"	914mm	35.98"	Fork/Pin

4GX-91 LOADING CHART

Span	m	ft	8.00	26.25	10.00	32.81	12.00	39.37	14.00	45.93	16.00	52.49	18.00	59.06	20.00	65.62	22.00	72.18
point load	kg	lbs	6121.20	13494.92	4855.70	10704.97	4004.40	8828.18	3389.70	7473.00	2923.00	6444.10	2554.90	5632.58	2255.80	4973.18	2007.00	4424.67
deflection	mm	inch	12.60	0.50	19.70	0.78	28.50	1.12	38.90	1.53	51.10	2.01	65.00	2.56	80.80	3.18	98.50	3.88
two point load	kg	lbs	4590.90	10121.19	3641.80	8028.79	3003.30	6621.14	2542.30	5604.81	2192.20	4832.97	1916.20	4224.49	1691.90	3730.00	1505.20	3318.39
deflection	mm	inch	16.00	0.63	25.00	0.98	36.00	1.42	49.10	1.93	64.10	2.52	81.30	3.20	100.50	3.96	121.80	4.80
three point load	kg	lbs	3060.60	6747.46	2427.80	5352.38	2002.20	4414.09	1694.90	3736.61	1461.50	3222.05	1277.40	2816.18	1127.90	2486.59	1003.50	2212.34
deflection	mm	inch	14.90	0.59	23.30	0.92	33.50	1.32	45.80	1.80	59.90	2.36	76.00	2.99	94.10	3.70	114.20	4.50
four point load	kg	lbs	2550.50	5622.88	2023.20	4460.39	1668.50	3678.41	1412.40	3113.81	1217.90	2685.01	1064.50	2346.82	939.90	2072.12	836.20	1843.50
deflection	mm	inch	15.80	0.62	24.60	0.97	35.50	1.40	48.40	1.91	63.30	2.49	80.30	3.16	99.30	3.91	120.30	4.74
distributed load	kg/m	lbs/ft	1490.50	1001.57	971.10	652.55	667.40	448.47	484.20	325.37	365.40	245.54	283.90	190.77	225.60	151.60	182.50	122.63
deflection	mm	inch	15.20	0.60	24.40	0.96	35.20	1.39	48.00	1.89	62.80	2.47	79.70	3.14	98.50	3.88	119.50	4.70

Span	24.00	78.74	26.00	85.30	28.00	91.86	30.00	98.43	32.00	104.99	34.00	111.55	36.00	118.11	38.00	124.67	40.00	131.23
point load	1795.80	3959.06	1613.50	3557.15	1454.00	3205.52	1312.70	2894.00	1186.30	2615.34	1072.00	2363.35	967.80	2133.63	872.20	1922.87	783.90	1728.20
deflection	118.20	4.65	139.90	5.51	163.70	6.44	189.80	7.47	218.10	8.59	248.90	9.80	282.20	11.11	318.20	12.53	357.00	14.06
two point load	1346.80	2969.18	1210.10	2667.81	1090.50	2404.14	984.60	2170.67	889.70	1961.45	804.00	1772.51	725.90	1600.33	654.20	1442.26	587.90	1296.10
deflection	145.20	5.72	170.80	6.72	198.50	7.81	228.40	8.99	260.50	10.26	294.80	11.61	331.50	13.05	370.40	14.58	411.60	16.20
three point load	897.90	1979.53	806.80	1778.69	727.00	1602.76	656.40	1447.11	593.10	1307.56	536.00	1181.68	483.90	1066.82	436.10	961.43	391.90	863.99
deflection	136.40	5.37	160.70	6.33	187.20	7.37	215.80	8.50	246.70	9.71	279.90	11.02	315.50	12.42	353.40	13.91	393.90	15.51
four point load	748.20	1649.50	672.30	1482.17	605.80	1335.56	547.00	1205.93	494.30	1089.74	446.70	984.80	403.30	889.12	363.40	801.16	326.60	720.03
deflection	143.50	5.65	168.80	6.65	196.30	7.73	225.90	8.89	257.80	10.15	291.90	11.49	328.30	12.93	367.00	14.45	408.10	16.07
distributed load	149.60	100.53	124.10	83.39	103.90	69.82	87.50	58.80	74.10	49.79	63.10	42.40	53.80	36.15	45.90	30.84	39.20	26.34
deflection	142.50	5.61	167.70	6.60	195.00	7.68	224.50	8.84	256.30	10.09	290.30	11.43	326.50	12.85	365.20	14.38	406.20	15.99

STANDARD LENGTHS AND WEIGHTS AVAILABLE

	m	ft	1.20	3.94	2.40	7.87	3.00	9.84
4GX-91	kg	lbs	36.70	80.95	64.00	141.14	72.20	159.33

Connection material (pins/clips) and packaging not included in above weights.

All truss loading calculations and TUV certifications are based on:
Truss supported or suspended at both ends • Static loadings only • Loads applied in the node points • Self weight of trusses included • Spans made of different truss lengths • Interaction of bending moment and shear force at connector • Structural calculations made in 2014 are based on DIN EN 1999-1-1 and DIN EN 1999-1-1/A2 • All loading data should be multiplied by 0.85 to comply with BS 7905-2 / ANSI E12-2006 / CWA 15902-2 • For any other application, or in case of an assembled structure, contact MILOS or a Structural Engineer • Safety factors used – self weight 1.35 / loading 1.5

Connected

Junctions

Connected

Junctions for M222, M290 & M390

- Widest range of standard junctions available for most applications
- Fast connection for quick, simple and secure assembly
- Custom lengths, angles and curved junctions are easily created
- Connection kit supplied with every truss junction
- Powder coat colour finish available on request

DUO STRAIGHTS AND JUNCTIONS

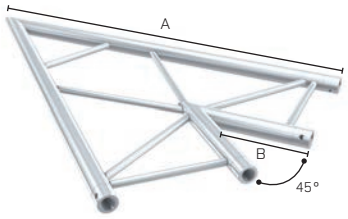

STRAIGHTS		length m (ft)							
Series	Code	0.5 (1.64)	1 (3.28)	1.5 (4.92)	2 (6.56)	2.5 (8.20)	3 (9.84)	4 (13.12)	5 (16.4)
M222	BTM	500	1000	1500	2000	2500	3000	4000	–
M290	BTB/BTV	500	1000	1500	2000	2500	3000	4000	5000
M390	BTK/BTL	500	1000	1500	2000	2500	3000	4000	5000

		BTM		BTB		BTV		BTK		BTL	
Weight of 1 m/kg*	3.28 ft/lbs	1.70	3.74	3.0	6.61	3.30	7.72	3.45	7.60	3.80	8.37

*excluding connection material

2 WAY HORIZONTAL CORNER 45°					
Series	Code	A	B	C	kg
M222	HM19	800	264	–	1.8
M290	HB/HV19	1000	300	–	3
M390	HK/HL19	1200	258	–	3.4

To calculate inches and pounds (mm x 25.4 = inch • kg x 2.204 = lbs)

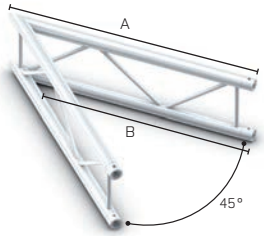

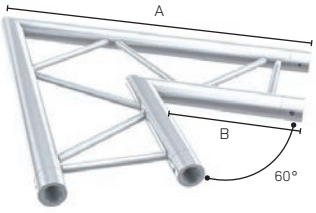

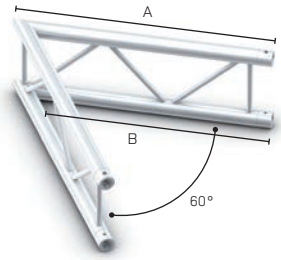

2 WAY VERTICAL CORNER 45°					
Series	Code	A	B	C	kg
M222	VM19	800	723	–	1.8
M290	VB/VV19	1000	879	–	3.0
M390	VK/VL19	1200	1079	–	3.4

To calculate inches and pounds (mm x 25.4 = inch • kg x 2.204 = lbs)

2 WAY HORIZONTAL CORNER 60°					
Series	Code	A	B	C	kg
M222	HM20	600	215	–	1.6
M290	HB/HV20	800	298	–	2.8
M390	HK/HL20	1000	325	–	3.4

To calculate inches and pounds (mm x 25.4 = inch • kg x 2.204 = lbs)

2 WAY VERTICAL CORNER 60°					
Series	Code	A	B	C	kg
M222	VM20	600	545	–	1.6
M290	VB/VV20	800	713	–	2.8
M390	VK/VL20	1000	913	–	3.4

To calculate inches and pounds (mm x 25.4 = inch • kg x 2.204 = lbs)

NOTE M290 / M390 dimensions are same for F & U versions

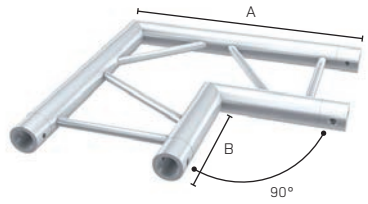

2 WAY HORIZONTAL CORNER 90°

Series	Code	A	B	C	kg
M222	HM21	400	178	–	1.6
M290	HB/HV21	500	210	–	2.4
M390	HK/HL21	600	210	–	3.0

To calculate inches and pounds (mm x 25.4 = inch • kg x 2.204 = lbs)

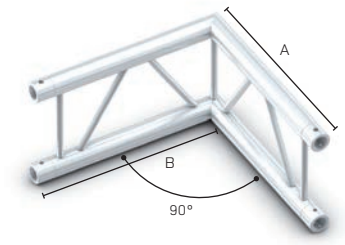

2 WAY VERTICAL CORNER 90°

Series	Code	A	B	C	kg
M222	VM21	400	368	–	1.6
M290	VB/VV21	500	450	–	2.4
M390	VK/VL21	600	550	–	3.0

To calculate inches and pounds (mm x 25.4 = inch • kg x 2.204 = lbs)

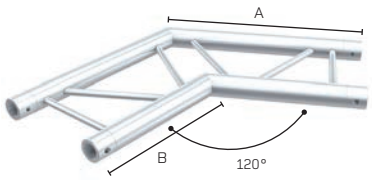

2 WAY HORIZONTAL CORNER 120°

Series	Code	A	B	C	kg
M222	HM22	400	272	–	1.6
M290	HB/HV22	500	333	–	2.4
M390	HK/HL22	600	375	–	3.0

To calculate inches and pounds (mm x 25.4 = inch • kg x 2.204 = lbs)

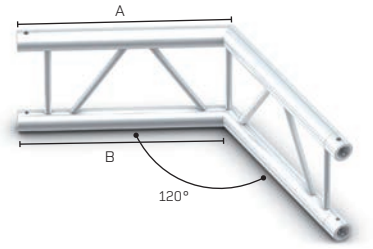

2 WAY VERTICAL CORNER 120°

Series	Code	A	B	C	kg
M222	VM22	400	382	–	1.6
M290	VB/VV22	500	471	–	2.4
M390	VK/VL22	600	571	–	3.0

To calculate inches and pounds (mm x 25.4 = inch • kg x 2.204 = lbs)

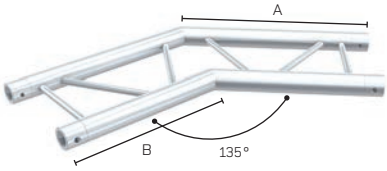

2 WAY HORIZONTAL CORNER 135°

Series	Code	A	B	C	kg
M222	HM23	400	308	–	1.6
M290	HB/HV23	500	380	–	2.4
M390	HK/HL23	600	438	–	3.0

To calculate inches and pounds (mm x 25.4 = inch • kg x 2.204 = lbs)

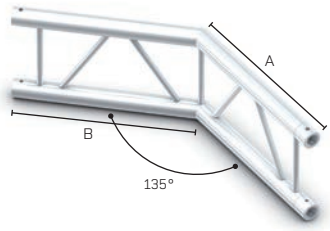

2 WAY VERTICAL CORNER 135°

Series	Code	A	B	C	kg
M222	VM23	400	387	–	1.6
M290	VB/VV23	500	479	–	2.4
M390	VK/VL23	600	579	–	3.0

To calculate inches and pounds (mm x 25.4 = inch • kg x 2.204 = lbs)

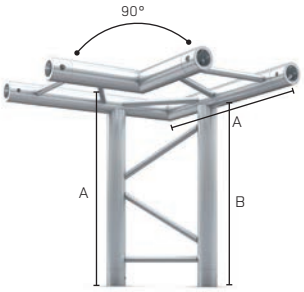

3 WAY HORIZONTAL CORNER 90° LEG DOWN

Series	Code	A	B	C	kg
M222	HM31	400	368	–	1.6
M290	HB/HV31	500	450	–	4.2
M390	HK/HL31	600	550	–	4.8

To calculate inches and pounds (mm x 25.4 = inch • kg x 2.204 = lbs)

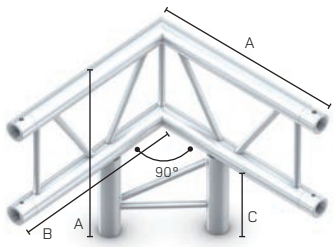

3 WAY VERTICAL CORNER 90° LEG DOWN

Series	Code	A	B	C	kg
M222	VM31	400	368	178	1.6
M290	VB/VV31	500	450	210	4.2
M390	VK/VL31	600	550	210	4.8

To calculate inches and pounds (mm x 25.4 = inch • kg x 2.204 = lbs)

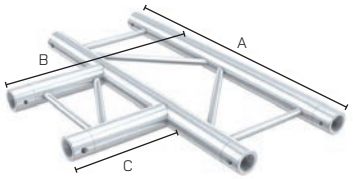

3 WAY HORIZONTAL T-PIECE

Series	Code	A	B	C	kg
M222	HM35	578	400	178	1.6
M290	HB/HV35	710	500	210	4.2
M390	HK/HL35	810	600	210	4.8

To calculate inches and pounds (mm x 25.4 = inch • kg x 2.204 = lbs)

NOTE M290 / M390 dimensions are same for F & U versions

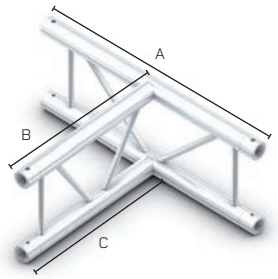

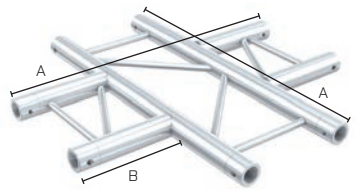

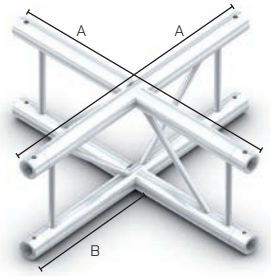

3 WAY VERTICAL T-PIECE

Series	Code	A	B	C	kg
M222	VM36	578	400	368	1.6
M290	VB/VV36	710	500	450	4.2
M390	VK/VL36	810	600	550	4.8

To calculate inches and pounds (mm x 25.4 = inch • kg x 2.204 = lbs)

4 WAY HORIZONTAL CROSS PIECE

Series	Code	A	B	C	kg
M222	HM41	578	179	–	2.0
M290	HB/HV41	710	210	–	4.2
M390	HK/HL41	810	210	–	4.8

To calculate inches and pounds (mm x 25.4 = inch • kg x 2.204 = lbs)

4 WAY VERTICAL CROSS PIECE

Series	Code	A	B	C	kg
M222	VM41	578	368	–	2.0
M290	VB/VV41	710	330	–	4.2
M390	VK/VL41	810	380	–	4.8

To calculate inches and pounds (mm x 25.4 = inch • kg x 2.204 = lbs)

TRIO STRAIGHTS AND JUNCTIONS

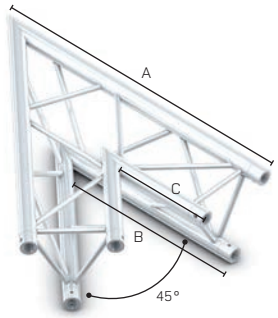

STRAIGHTS

Series	Code	0.5 (1.64)	1 (3.28)	1.5 (4.92)	2 (6.56)	2.5 (8.20)	3 (9.84)	4 (13.12)	5 (16.4)
		length m (ft)							
M222	STM	500	1000	1500	2000	2500	3000	4000	–
M290	STB/STV	500	1000	1500	2000	2500	3000	4000	5000
M390	STK/STL	500	1000	1500	2000	2500	3000	4000	5000

		STM		STB		STV		STK		STL	
Weight of 1 m/kg*	3.28 ft/lbs	2.30	5.01	4.50	9.92	5.00	11.0	4.95	10.9	5.75	12.7

*excluding connection material

2 WAY CORNER 45°

Series	Code	A	B	C	kg
M222	ACM19	800	493	264	2.5
M290	ACB/ACV19	1000	590	300	6.0
M390	ACK/ACL19	1200	669	258	6.9

To calculate inches and pounds (mm x 25.4 = inch • kg x 2.204 = lbs)

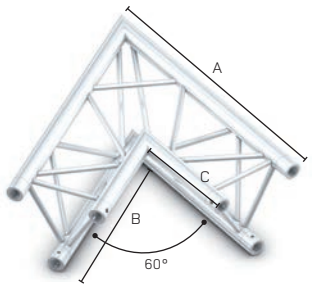

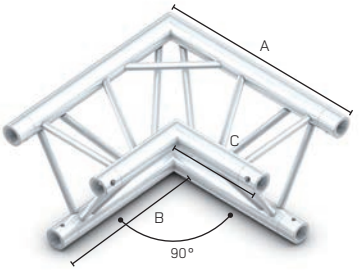

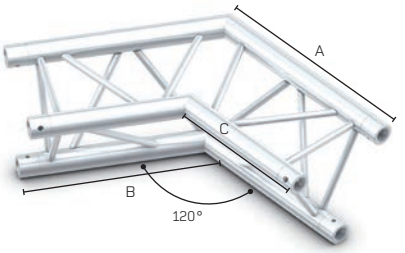

2 WAY CORNER 60°

Series	Code	A	B	C	kg
M222	ACM20	600	380	215	2.3
M290	ACB/ACV20	800	506	298	5.5
M390	ACK/ACL20	1000	619	324	6.9

To calculate inches and pounds (mm x 25.4 = inch • kg x 2.204 = lbs)

2 WAY CORNER 90°

Series	Code	A	B	C	kg
M222	ACM21	400	273	178	2.2
M290	ACB/ACV21	500	330	210	4.8
M390	ACK/ACL21	600	330	210	5.2

To calculate inches and pounds (mm x 25.4 = inch • kg x 2.204 = lbs)

2 WAY CORNER 120°

Series	Code	A	B	C	kg
M222	ACM22	400	327	272	2.3
M290	ACB/ACV22	500	402	333	4.8
M390	ACK/ACL22	600	473	375	5.4

To calculate inches and pounds (mm x 25.4 = inch • kg x 2.204 = lbs)

NOTE M290 / M390 dimensions are same for F & U versions

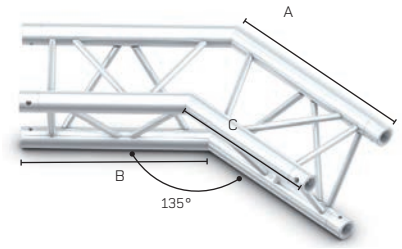

2 WAY CORNER 135°

Series	Code	A	B	C	kg
M222	ACM23	400	347	308	2.3
M290	ACB/ACV23	500	430	380	4.8
M390	ACK/ACL23	600	509	438	5.4

To calculate inches and pounds (mm x 25.4 = inch • kg x 2.204 = lbs)

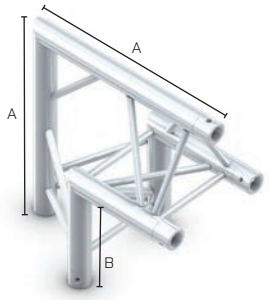

2 WAY CORNER 90° APEX OUT

Series	Code	A	B	C	kg
M222	ACM24	400	204	–	2.2
M290	ACB/ACV24	500	242	–	4.8
M390	ACK/ACL24	600	256	–	5.2

To calculate inches and pounds (mm x 25.4 = inch • kg x 2.204 = lbs)

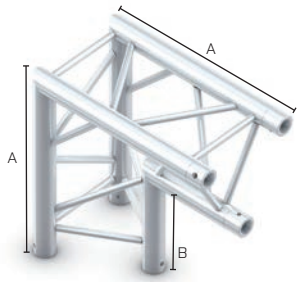

2 WAY CORNER 90° APEX IN

Series	Code	A	B	C	kg
M222	ACM25	400	204	–	2.2
M290	ACB/ACV25	500	242	–	4.8
M390	ACK/ACL25	600	256	–	5.2

To calculate inches and pounds (mm x 25.4 = inch • kg x 2.204 = lbs)

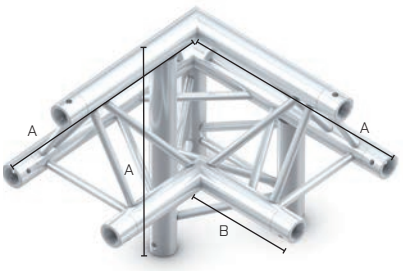

3 WAY CORNER 90° APEX UP RIGHT

Series	Code	A	B	C	kg
M222	ALM31	400	178	–	2.9
M290	ALB/ALV31	500	210	–	7.2
M390	ALK/ALL31	600	210	–	8.1

To calculate inches and pounds (mm x 25.4 = inch • kg x 2.204 = lbs)

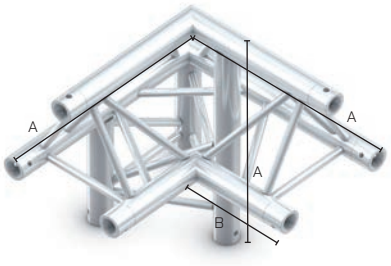

3 WAY CORNER 90° APEX UP LEFT

Series	Code	A	B	C	kg
M222	ALM32	400	178	–	2.9
M290	ALB/ALV32	500	210	–	7.2
M390	ALK/ALL32	600	210	–	8.1

To calculate inches and pounds (mm x 25.4 = inch • kg x 2.204 = lbs)

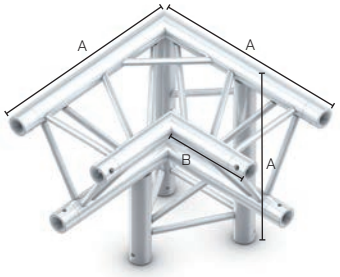

3 WAY CORNER 90° APEX DOWN RIGHT

Series	Code	A	B	C	kg
M222	ALM33	400	178	–	2.9
M290	ALB/ALV33	500	210	–	7.2
M390	ALK/ALL33	600	210	–	8.1

To calculate inches and pounds (mm x 25.4 = inch • kg x 2.204 = lbs)

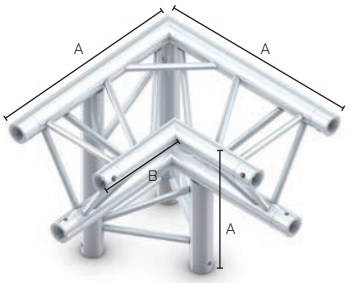

3 WAY CORNER 90° APEX DOWN LEFT

Series	Code	A	B	C	kg
M222	ALM34	400	178	–	2.9
M290	ALB/ALV34	500	210	–	7.2
M390	ALK/ALL34	600	210	–	8.1

To calculate inches and pounds (mm x 25.4 = inch • kg x 2.204 = lbs)

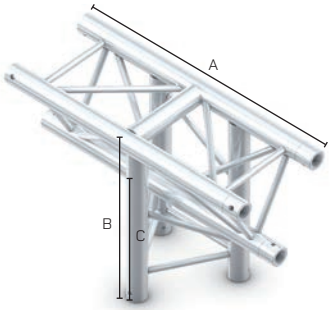

3 WAY VERTICAL T-PIECE APEX DOWN

Series	Code	A	B	C	kg
M222	ATM35	578	400	203	2.9
M290	ATB/ATV35	710	500	242	7.2
M390	ATK/ATL35	810	600	256	8.1

To calculate inches and pounds (mm x 25.4 = inch • kg x 2.204 = lbs)

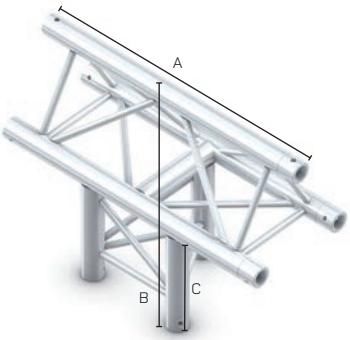

3 WAY VERTICAL T-PIECE APEX UP

Series	Code	A	B	C	kg
M222	ATM35B	578	400	203	2.9
M290	ATB/ATV35B	710	500	242	7.2
M390	ATK/ATL35B	810	600	256	8.1

To calculate inches and pounds (mm x 25.4 = inch • kg x 2.204 = lbs)

NOTE M290 / M390 dimensions are same for F & U versions

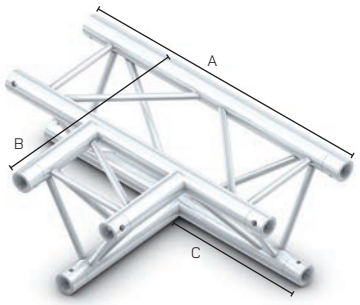

3 WAY HORIZONTAL T-PIECE

Series	Code	A	B	C	kg
M222	ATM36	578	400	273	2.9
M290	ATB/ATV36	710	500	330	7.2
M390	ATK/ATL36	810	600	380	8.1

To calculate inches and pounds (mm x 25.4 = inch • kg x 2.204 = lbs)

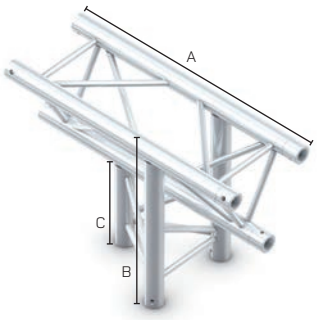

3 WAY VERTICAL T-PIECE APEX DOWN

Series	Code	A	B	C	kg
M222	ATM37	603.5	400	203	3.1
M290	ATB/ATV37	742	500	242	7.2
M390	ATK/ATL37	855	600	256	8.3

To calculate inches and pounds (mm x 25.4 = inch • kg x 2.204 = lbs)

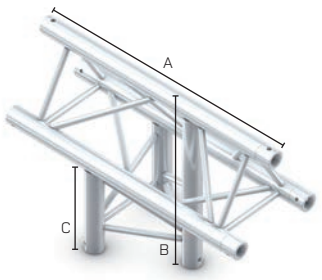

3 WAY VERTICAL T-PIECE APEX UP

Series	Code	A	B	C	kg
M222	ATM37B	603.5	400	203	3.1
M290	ATB/ATV37B	742	500	242	7.2
M390	ATK/ATL37B	855	600	256	8.3

To calculate inches and pounds (mm x 25.4 = inch • kg x 2.204 = lbs)

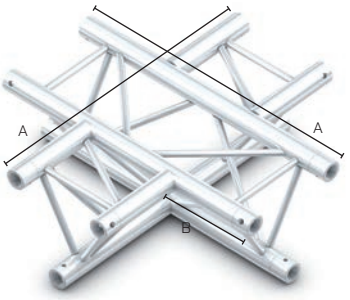

4 WAY CROSS PIECE

Series	Code	A	B	C	kg
M222	ACM41	578	178	–	3.5
M290	ACB/ACV41	710	210	–	9.6
M390	ACK/ACL41	810	210	–	11.2

To calculate inches and pounds (mm x 25.4 = inch • kg x 2.204 = lbs)

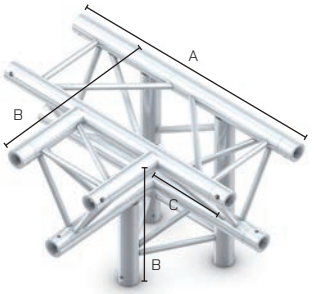

4 WAY T-PIECE APEX DOWN

Series	Code	A	B	C	kg
M222	ATM42	578	400	273	3.5
M290	ATB/ATV42	710	500	330	9.6
M390	ATK/ATL42	810	600	380	11.2

To calculate inches and pounds (mm x 25.4 = inch • kg x 2.204 = lbs)

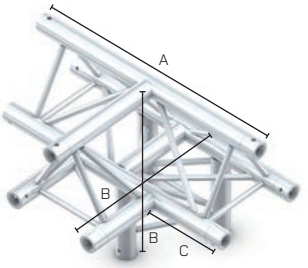

4 WAY T-PIECE APEX UP

Series	Code	A	B	C	kg
M222	ATM43	578	400	178	3.5
M290	ATB/ATV43	710	500	210	9.6
M390	ATK/ATL43	810	600	210	11.2

To calculate inches and pounds (mm x 25.4 = inch • kg x 2.204 = lbs)

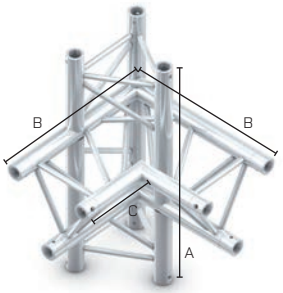

4 WAY CORNER 90° RIGHT

Series	Code	A	B	C	kg
M222	ACM44	603.5	400	273	3.5
M290	ACB/ACV44	742	500	330	9.6
M390	ACK/ACL44	855	600	380	11.2

To calculate inches and pounds (mm x 25.4 = inch • kg x 2.204 = lbs)

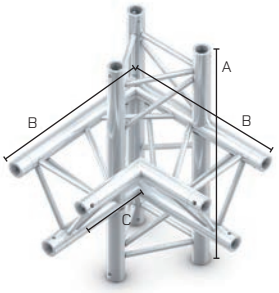

4 WAY CORNER 90° LEFT

Series	Code	A	B	C	kg
M222	ACM45	603.5	400	273	3.5
M290	ACB/ACV45	742	500	330	9.6
M390	ACK/ACL45	855	600	380	11.2

To calculate inches and pounds (mm x 25.4 = inch • kg x 2.204 = lbs)

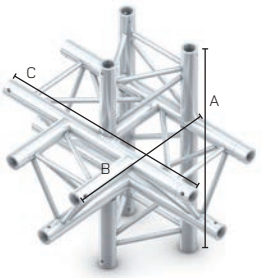

5 WAY T-PIECE

Series	Code	A	B	C	kg
M222	ATM51	603.5	400	578	3.8
M290	ATB/ATV51	742	500	710	12
M390	ATK/ATL51	855	600	810	14

To calculate inches and pounds (mm x 25.4 = inch • kg x 2.204 = lbs)

NOTE M290 / M390 dimensions are same for F & U versions

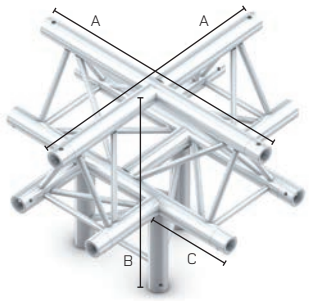

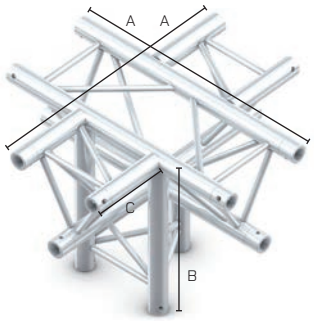

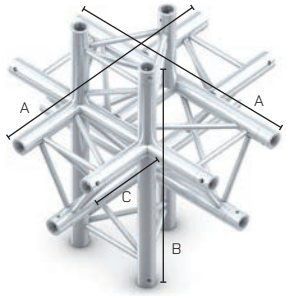

5 WAY CROSS DOWN LEG APEX UP

Series	Code	A	B	C	kg
M222	ACM52	578	400	178	3.8
M290	ACB/ACV52	710	500	210	12
M390	ACK/ACL52	810	600	210	14

To calculate inches and pounds (mm x 25.4 = inch • kg x 2.204 = lbs)

5 WAY CROSS DOWN LEG APEX DOWN

Series	Code	A	B	C	kg
M222	ACM53	578	400	178	3.8
M290	ACB/ACV53	710	500	210	12
M390	ACK/ACL53	810	600	210	14

To calculate inches and pounds (mm x 25.4 = inch • kg x 2.204 = lbs)

6 WAY T-PIECE

Series	Code	A	B	C	kg
M222	ACM61	578	603.5	178	4.5
M290	ACB/ACV61	710	742	210	14.4
M390	ACK/ACL61	810	855	210	16

To calculate inches and pounds (mm x 25.4 = inch • kg x 2.204 = lbs)

QUATRO STRAIGHTS AND JUNCTIONS

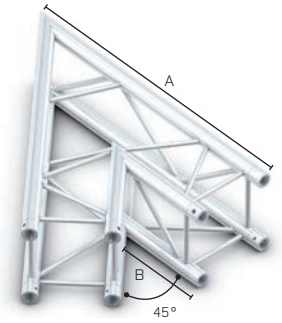

STRAIGHTS

Series	Code	length m (ft)							
		0.5 (1.64)	1 (3.28)	1.5 (4.92)	2 (6.56)	2.5 (8.20)	3 (9.84)	4 (13.12)	5 (16.4)
M222	QTM	500	1000	1500	2000	2500	3000	4000	–
M290	QTB/QTV	500	1000	1500	2000	2500	3000	4000	5000
M390	QTK/QTL	500	1000	1500	2000	2500	3000	4000	5000

		QTM		QTB		QTV		QTK		QTL	
Weight of 1 m/kg	(3.28 ft/lbs)	3.50	7.71	5.90	13.0	6.40	14.1	6.50	14.3	7.10	15.7

*excluding connection material

2 WAY CORNER 45°

Series	Code	A	B	C	kg
M222	QCM19	800	264	–	3.5
M290	QCB/QCV19	1000	300	–	8.1
M390	QCK/QCL19	1200	258	–	11.2

To calculate inches and pounds (mm x 25.4 = inch • kg x 2.204 = lbs)

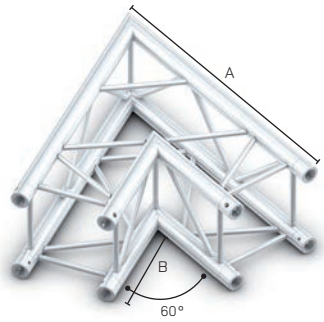

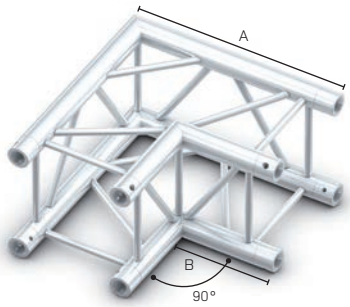

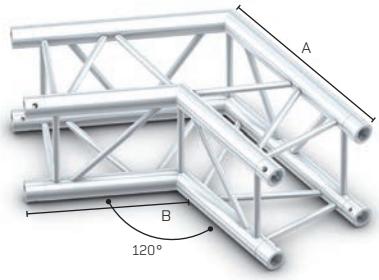

2 WAY CORNER 60°

Series	Code	A	B	C	kg
M222	QCM20	600	215	–	3.3
M290	QCB/QCV20	800	298	–	7.2
M390	QCK/QCL20	1000	325	–	11.2

To calculate inches and pounds (mm x 25.4 = inch • kg x 2.204 = lbs)

2 WAY CORNER 90°

Series	Code	A	B	C	kg
M222	QCM21	400	178	–	3.1
M290	QCB/QCV21	500	210	–	6.6
M390	QCK/QCL21	600	210	–	8.9

To calculate inches and pounds (mm x 25.4 = inch • kg x 2.204 = lbs)

2 WAY CORNER 120°

Series	Code	A	B	C	kg
M222	QCM22	400	272	–	3.3
M290	QCB/QCV22	500	333	–	6.6
M390	QCK/QCL22	600	375	–	8.9

To calculate inches and pounds (mm x 25.4 = inch • kg x 2.204 = lbs)

NOTE M290 / M390 dimensions are same for F & U versions

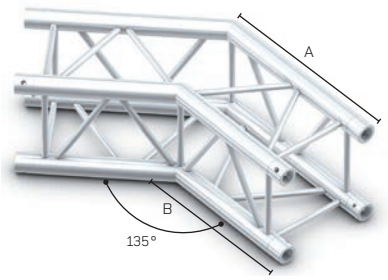

2 WAY CORNER 135°

Series	Code	A	B	C	kg
M222	QCM23	400	308	–	3.3
M290	QCB/QCV23	500	380	–	6.6
M390	QCK/QCL23	600	438	–	8.9

To calculate inches and pounds (mm x 25.4 = inch • kg x 2.204 = lbs)

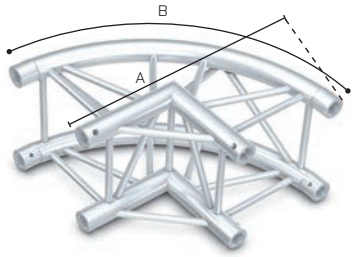

2 WAY CURVED CORNER 90°

Series	Code	A	B	C	kg
M290	QCB21-KRS	500	785	-	6.6kg

To calculate inches and pounds (mm x 25.4 = inch * kg x 2.204 = lbs)

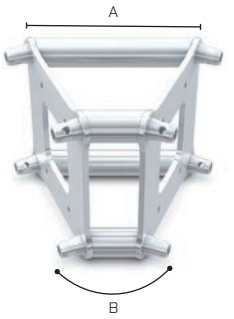

2 WAY VERTICAL CORNER - NON WELDED

Series	Code	A	B	C	kg
M290	QCBC120°MC	360	120°	-	9.1
M290	QCBC135°MC	290	135°	-	8.4
M290	QCBC150°MC	218	150°	-	7.6kg

To calculate inches and pounds (mm x 25.4 = inch * kg x 2.204 = lbs)

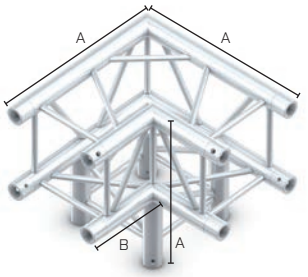

3 WAY CORNER 90°

Series	Code	A	B	C	kg
M222	QLM30	400	179	–	4.0
M290	QLB/QLV30	500	210	–	9.6
M390	QLK/QLL30	600	210	–	11.4

To calculate inches and pounds (mm x 25.4 = inch • kg x 2.204 = lbs)

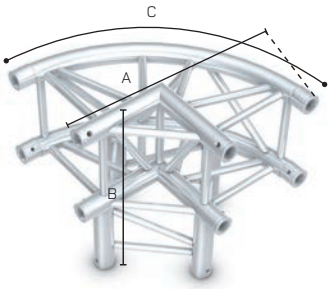

3 WAY CURVED CORNER 90°

Series	Code	A	B	C	kg
M290	QLB30-KRS	500	500	785	9.6kg

To calculate inches and pounds (mm x 25.4 = inch * kg x 2.204 = lbs)

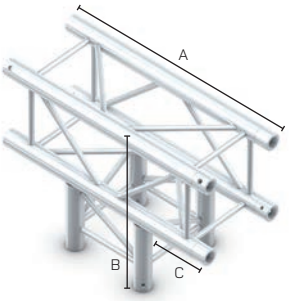

3 WAY T-PIECE

Series	Code	A	B	C	kg
M222	QTM35	578	400	179	4.0
M290	QTB/QTV35	710	500	210	9.6
M390	QTK/QTL35	810	600	210	11.2

To calculate inches and pounds (mm x 25.4 = inch • kg x 2.204 = lbs)

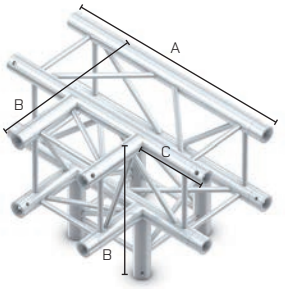

4 WAY T-PIECE LEG DOWN

Series	Code	A	B	C	kg
M222	QLM40	578	400	179	4.4
M290	QLB/QLV40	710	500	210	12.6
M390	QLK/QLL40	810	600	210	14.4

To calculate inches and pounds (mm x 25.4 = inch • kg x 2.204 = lbs)

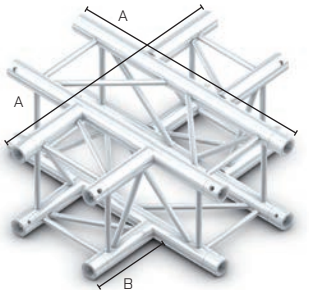

4 WAY CROSS PIECE

Series	Code	A	B	C	kg
M222	QCM41	578	179	–	4.4
M290	QCB/QCV41	710	210	–	12.6
M390	QCK/QCL41	810	210	–	14.4

To calculate inches and pounds (mm x 25.4 = inch • kg x 2.204 = lbs)

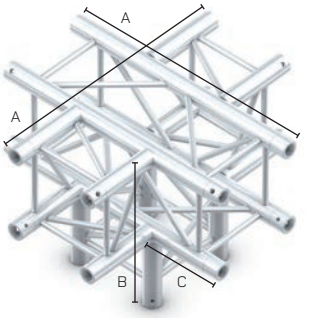

5 WAY CROSS DOWN LEG

Series	Code	A	B	C	kg
M222	QCM51	578	400	179	4.9
M290	QCB/QCV51	710	500	210	16.2
M390	QCK/QCL51	810	600	210	18.1

To calculate inches and pounds (mm x 25.4 = inch • kg x 2.204 = lbs)

NOTE M290 / M390 dimensions are same for F & U versions

Connected
Junctions for M290E

- Compatible with 200/400/500/600 series cell clamps
- Powder coat colour finish available on request
- Connection kit supplied with every truss junction

STRAIGHTS		length m (ft)							
Series	**Code**	0.5 (1.64)	1 (3.28)	1.5 (4.92)	2 (6.56)	2.5 (8.20)	3 (9.84)	4 (13.12)	5 (16.4)
M290E	**BTBE**	500	1000	1500	2000	2500	3000	4000	5000

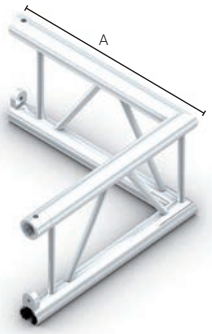

2 WAY VERTICAL CORNER 90°					
Series	**Code**	A	B	C	kg
M290E	**VBE21**	500	–	–	2.9

To calculate inches and pounds (mm x 25.4 = inch • kg x 2.204 = lbs)

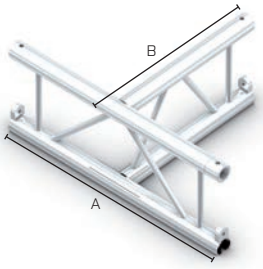

3 WAY VERTICAL T-PIECE					
Series	**Code**	A	B	C	kg
M290E	**VBE36**	710	500	–	3.7

To calculate inches and pounds (mm x 25.4 = inch • kg x 2.204 = lbs)

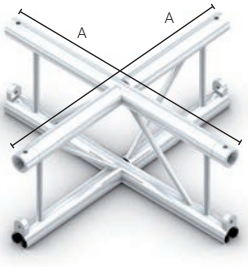

4 WAY VERTICAL CROSS PIECE					
Series	**Code**	A	B	C	kg
M290E	**VBE41**	710	–	–	4.4

To calculate inches and pounds (mm x 25.4 = inch • kg x 2.204 = lbs)

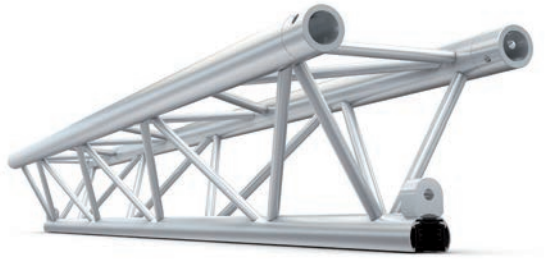

STRAIGHTS		length m (ft)							
Series	Code	0.5 (1.64)	1 (3.28)	1.5 (4.92)	2 (6.56)	2.5 (8.20)	3 (9.84)	4 (13.12)	5 (16.4)
M290E	STBE	500	1000	1500	2000	2500	3000	4000	5000

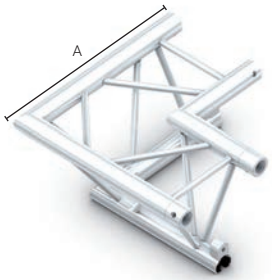

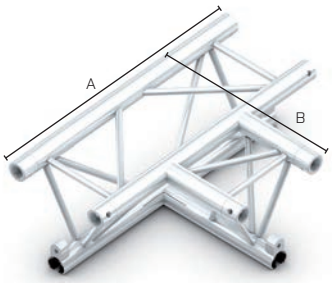

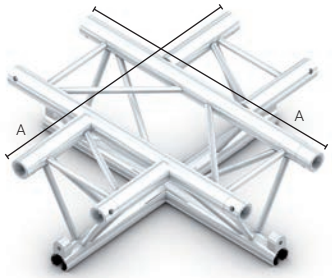

2 WAY CORNER 90°					
Series	Code	A	B	C	kg
M290E	ACBE21	500	–	–	3.7

To calculate inches and pounds (mm x 25.4 = inch • kg x 2.204 = lbs)

3 WAY HORIZONTAL T-PIECE					
Series	Code	A	B	C	kg
M290E	ATBE36	710	500	–	5.2

To calculate inches and pounds (mm x 25.4 = inch • kg x 2.204 = lbs)

4 WAY CROSS PIECE					
Series	Code	A	B	C	kg
M290E	ACBE41	710	–	–	4.4

To calculate inches and pounds (mm x 25.4 = inch • kg x 2.204 = lbs)

Connected

Junctions for M400 & M520

- Fast connection for quick, simple and secure assembly
- Compatible with 200/400/500/600 series cell clamps
- Powder coat colour finish available on request
- Connection kit supplied with every truss junction

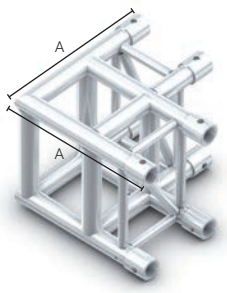

2 WAY CORNER 90°					
Series	**Code**	A	B	C	kg
M400	**RCO21**	433	–	–	10.8

To calculate inches and pounds (mm x 25.4 = inch • kg x 2.204 = lbs)

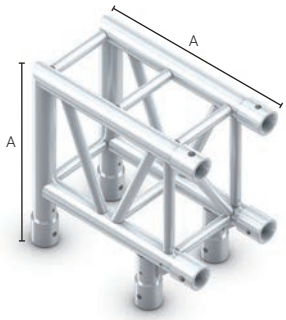

2 WAY CORNER 90°					
Series	**Code**	A	B	C	kg
M400	**RCO24**	479	–	–	10.8

To calculate inches and pounds (mm x 25.4 = inch • kg x 2.204 = lbs)

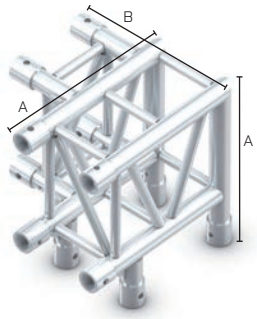

3 WAY CORNER 90°					
Series	**Code**	A	B	C	kg
M400	**RLO31**	479	433	–	11.9

To calculate inches and pounds (mm x 25.4 = inch • kg x 2.204 = lbs)

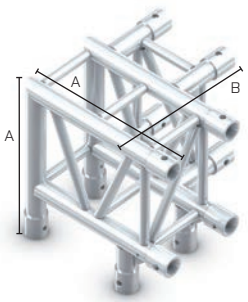

3 WAY CORNER 90°					
Series	**Code**	A	B	C	kg
M400	**RLO32**	479	433	–	11.9

To calculate inches and pounds (mm x 25.4 = inch • kg x 2.204 = lbs)

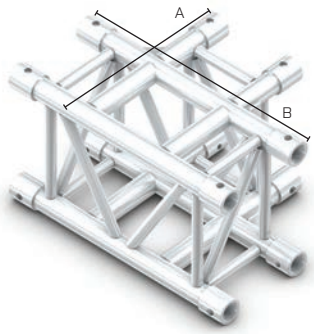

3 WAY T-PIECE					
Series	**Code**	A	B	C	kg
M400	**RTO35**	433	600	–	11.9

To calculate inches and pounds (mm x 25.4 = inch • kg x 2.204 = lbs)

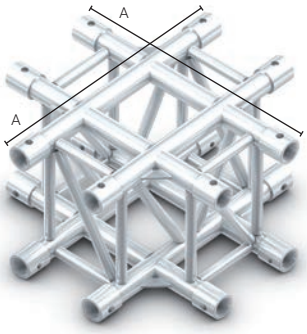

4 WAY CROSS PIECE					
Series	**Code**	A	B	C	kg
M400	**RCO41**	600	–	–	16.8

To calculate inches and pounds (mm x 25.4 = inch • kg x 2.204 = lbs)

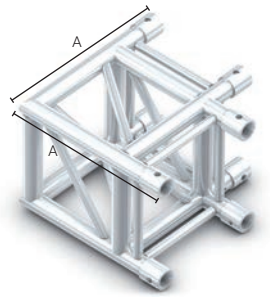

2 WAY CORNER 90°

Series	Code	A	B	C	kg
M400	QCO21	479	–	–	11.66

To calculate inches and pounds (mm x 25.4 = inch • kg x 2.204 = lbs)

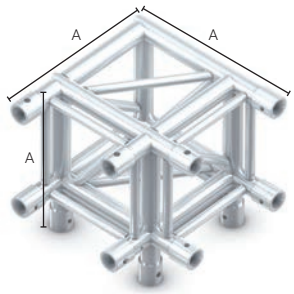

3 WAY CORNER 90°

Series	Code	A	B	C	kg
M400	QLO30	479	–	–	12.9

To calculate inches and pounds (mm x 25.4 = inch • kg x 2.204 = lbs)

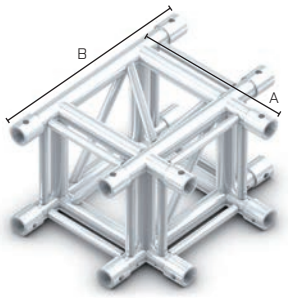

3 WAY T-PIECE

Series	Code	A	B	C	kg
M400	QTO35	479	600	–	12.9

To calculate inches and pounds (mm x 25.4 = inch • kg x 2.204 = lbs)

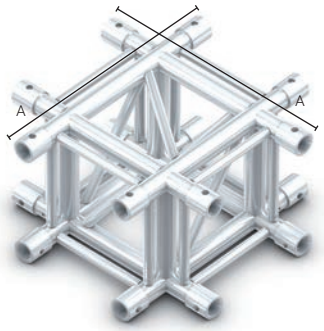

4 WAY CROSS PIECE

Series	Code	A	B	C	kg
M400	QCO41	600	–	–	18

To calculate inches and pounds (mm x 25.4 = inch • kg x 2.204 = lbs)

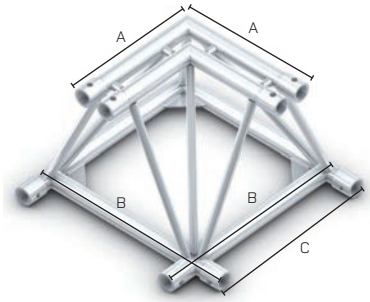

2 WAY CORNER 90°

Series	Code	A	B	C	kg
M520	FCP21	439	660	579	15.17

To calculate inches and pounds (mm x 25.4 = inch • kg x 2.204 = lbs)

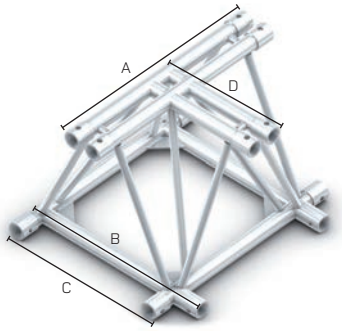

3 WAY T-PIECE

Series	Code	A	B	C	D	kg
M520	FTP35	740	660	579	439	16.77

To calculate inches and pounds (mm x 25.4 = inch • kg x 2.204 = lbs)

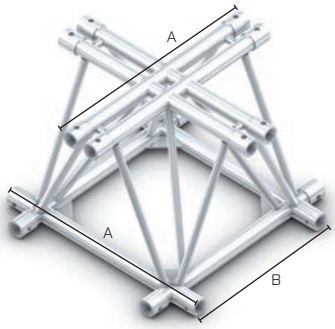

3 WAY CROSS PIECE

Series	Code	A	B	C	kg
M520	FCP41	740	579	–	21.84

To calculate inches and pounds (mm x 25.4 = inch • kg x 2.204 = lbs)

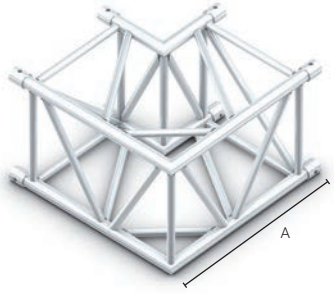

2 WAY CORNER 90°

Series	Code	A	B	C	kg
M520	QCP21	800	–	–	17.0

To calculate inches and pounds (mm x 25.4 = inch • kg x 2.204 = lbs)

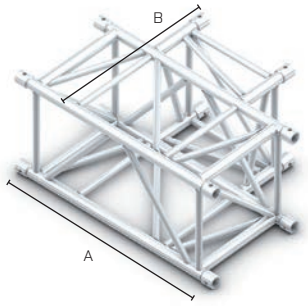

3 WAY T-PIECE

Series	Code	A	B	C	kg
M520	QTP35	1080	800	–	24.0

To calculate inches and pounds (mm x 25.4 = inch • kg x 2.204 = lbs)

Connected

Junctions for 4GS-35 & 4GX-91

- Fork & pin connection
- Connection kit supplied with every truss junction
- Compatible with 200/400/500/600 series cell clamps
- Powder coat colour finish available on request

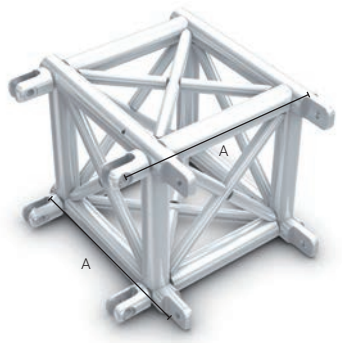

2 WAY CORNER 90° HORIZONTAL

Series	Code	A	B	C	kg
4GS-35	J21	373	–	–	10.6

To calculate inches and pounds (mm x 25.4 = inch • kg x 2.204 = lbs)

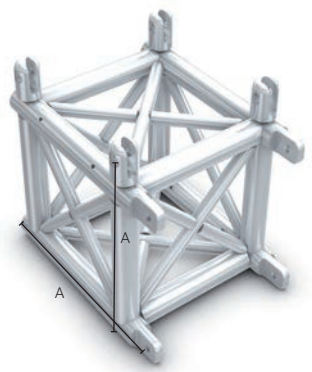

2 WAY CORNER 90° VERTICAL

Series	Code	A	B	C	kg
4GS-35	J21C	373	–	–	10.6

To calculate inches and pounds (mm x 25.4 = inch • kg x 2.204 = lbs)

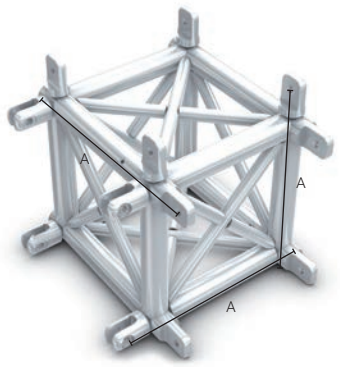

3 WAY CORNER 90° MALE DOWN

Series	Code	A	B	C	kg
4GS-35	J30	373	–	–	11.5

To calculate inches and pounds (mm x 25.4 = inch • kg x 2.204 = lbs)

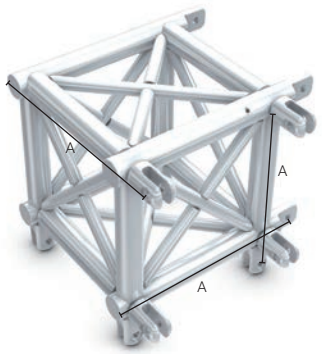

3 WAY CORNER 90° FEMALE DOWN

Series	Code	A	B	C	kg
4GS-35	J30C	373	–	–	11.5

To calculate inches and pounds (mm x 25.4 = inch • kg x 2.204 = lbs)

3 WAY T-PIECE HORIZONTAL

Series	Code	A	B	C	kg
4GS-35	J35	373	447	–	11.5

To calculate inches and pounds (mm x 25.4 = inch • kg x 2.204 = lbs)

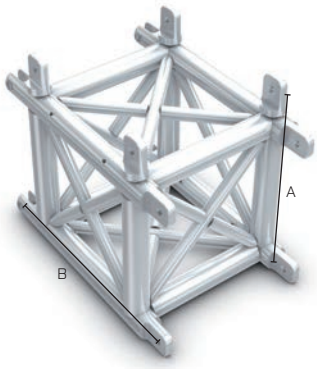

3 WAY T-PIECE VERTICAL

Series	Code	A	B	C	kg
4GS-35	J35C	373	447	–	11.5

To calculate inches and pounds (mm x 25.4 = inch • kg x 2.204 = lbs)

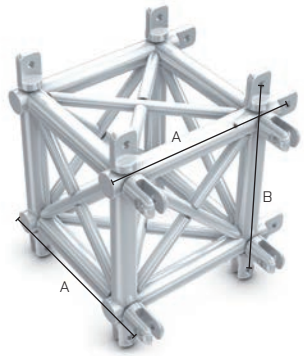

4 WAY CORNER

Series	Code	A	B	C	kg
4GS-35	J40	373	447	–	12.3

To calculate inches and pounds (mm x 25.4 = inch • kg x 2.204 = lbs)

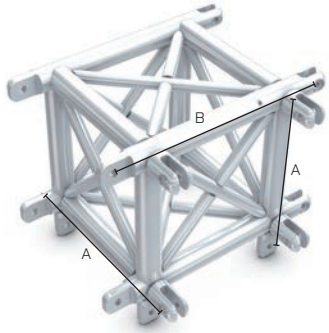

4 WAY T-PIECE

Series	Code	A	B	C	kg
4GS-35	J40C	373	447	–	12.3

To calculate inches and pounds (mm x 25.4 = inch • kg x 2.204 = lbs)

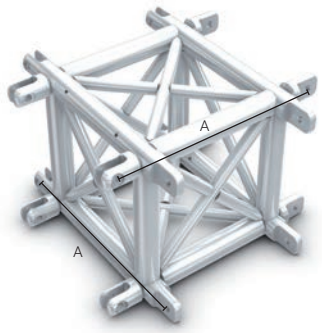

4 WAY CROSS PIECE HORIZONTAL

Series	Code	A	B	C	kg
4GS-35	J41	447	–	–	13.0

To calculate inches and pounds (mm x 25.4 = inch • kg x 2.204 = lbs)

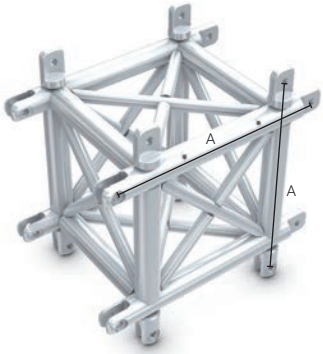

4 WAY CROSS PIECE VERTICAL

Series	Code	A	B	C	kg
4GS-35	J41B	447	–	–	13.0

To calculate inches and pounds (mm x 25.4 = inch • kg x 2.204 = lbs)

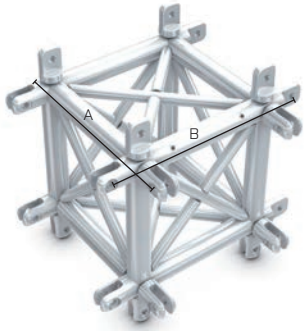

5 WAY T-PIECE

Series	Code	A	B	C	kg
4GS-35	J55	373	447	–	13.8

To calculate inches and pounds (mm x 25.4 = inch • kg x 2.204 = lbs)

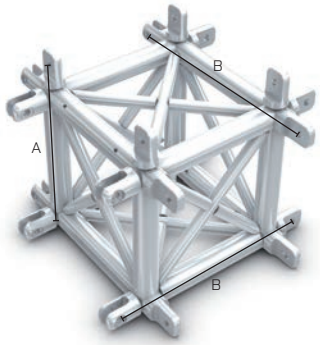

5 WAY CROSS PIECE MALE DOWN

Series	Code	A	B	C	kg
4GS-35	J55C	373	447	–	13.8

To calculate inches and pounds (mm x 25.4 = inch • kg x 2.204 = lbs)

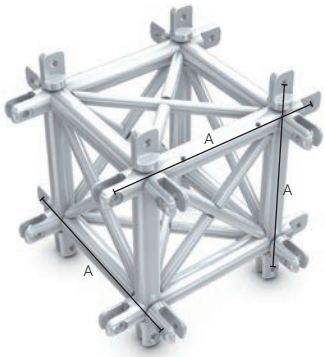

6 WAY CROSS PIECE

Series	Code	A	B	C	kg
4GS-35	J65	447	–	–	14.6

To calculate inches and pounds (mm x 25.4 = inch • kg x 2.204 = lbs)

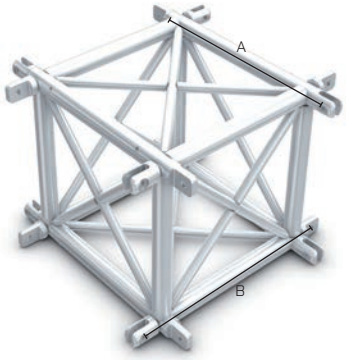

4 WAY CROSS PIECE HORIZONTAL

Series	Code	A	B	C	kg
4GS-50	J41	526	600	–	17.8

To calculate inches and pounds (mm x 25.4 = inch • kg x 2.204 = lbs)

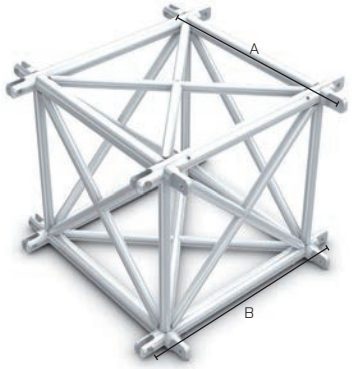

4 WAY CROSS PIECE HORIZONTAL

Series	Code	A	B	C	kg
4GS-62	J41	643	717	–	20.7

To calculate inches and pounds (mm x 25.4 = inch • kg x 2.204 = lbs)

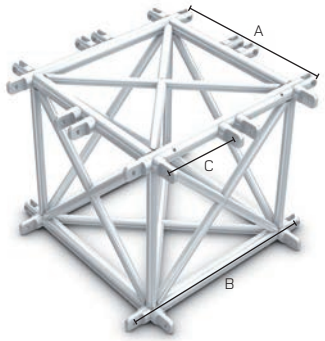

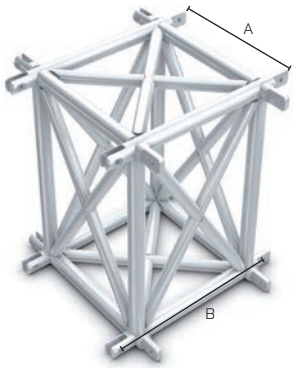

4 WAY CROSS PIECE HORIZONTAL

Series	Code	A	B	C	kg
4GS-62F	**J41**	643	717	250.5	22.5

To calculate inches and pounds (mm x 25.4 = inch • kg x 2.204 = lbs)

4 WAY CROSS PIECE HORIZONTAL

Series	Code	A	B	C	kg
4GX-91	**J41**	645	740	–	41.5

To calculate inches and pounds (mm x 25.4 = inch • kg x 2.204 = lbs)

Connected

Multicubes

Connected

Multicubes for M222 - M950 & 4GS-35

- The perfect solution for production house stock inventory
- Integrated location holes for quick set-up & re-configuration
- Light, regular & heavy-duty versions available (290 / 390 only)
- Heavy-duty cubes enable maximum loading capacity from your trusses
- Male & female receiver accessories available
- Flexible use
- Profiled tube with thread

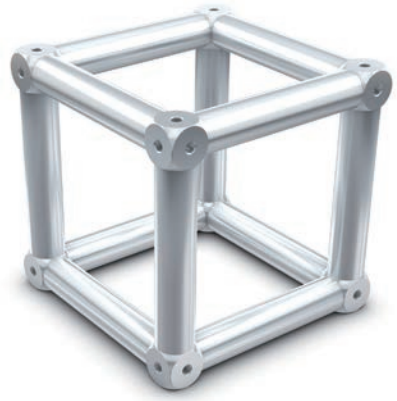

MULTICUBE QCM1 FOR M222 QUATRO — SUITABLE FITTINGS: CON46 OR CON62

Series	Code	A		B		C		Weight	
M222	QCM1	222.0 mm	8.74"	–	–	–	–	2.4 kg	5.28 lbs

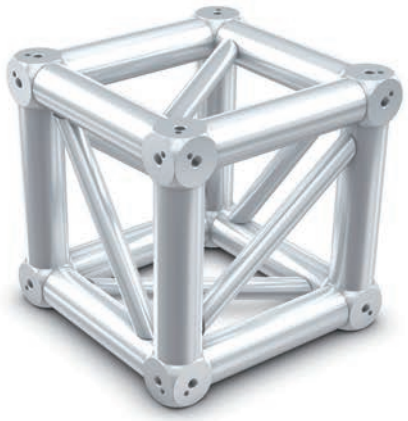

Regular & HD version

Light

MULTICUBE QCB1 FOR M290 QUATRO — SUITABLE FITTINGS: CON25/CON56/CON63/CON64

Series	Code	A		B		C		Weight	
M290	QCB1	289.2 mm	11.39"	–	–	–	–	8.0 kg	17.60 lbs
M290	QCB1LGT	289.2 mm	11.39"	–	–	–	–	5.0 kg	11.02 lbs
M290	QCHB1	289.2 mm	11.39"	–	–	–	–	8.1 kg	17.85 lbs

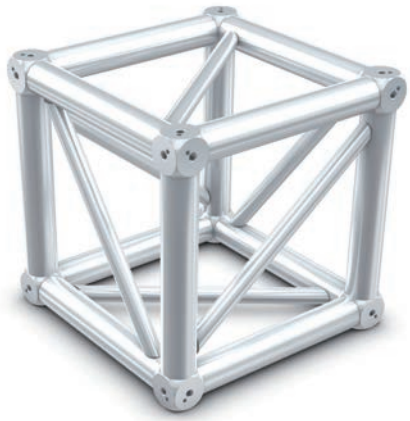

Regular & HD version

Light

MULTICUBE QCK1 FOR M390 QUATRO									SUITABLE FITTINGS: CON25/CON56/CON63/CON64
Series	**Code**	A		B		C		Weight	
M390	**QCK1**	388.4 mm	15.29"	–	–	–	–	10.9 kg	23.98 lbs
M390	**QCB1LGT**	388.4 mm	15.29"	–	–	–	–	6.0 kg	12.25 lbs
M390	**QCHK1**	388.4 mm	15.29"	–	–	–	–	11.1 kg	24.47 lbs

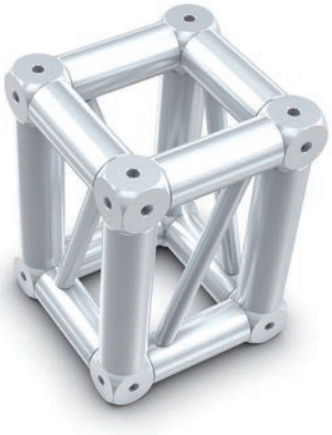

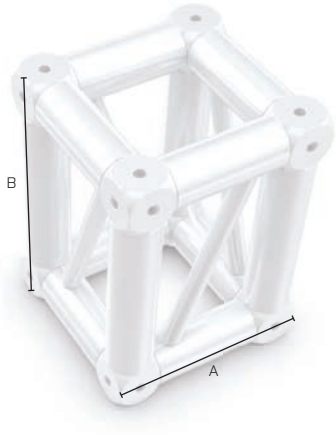

MULTICUBE RCO1 FOR M400 RECT									SUITABLE FITTINGS: CON47
Series	**Code**	A		B		C		Weight	
M400 RECT	**RCO1**	264.9 mm	10.43"	357 mm	14.06"	–	–	12.5 kg	27.50 lbs

MULTICUBE QCO1 FOR M400 QUATRO									SUITABLE FITTINGS: CON47
Series	**Code**	A		B		C		Weight	
M400 QUATRO	**QCO1**	357.0 mm	14.06"	–	–	–	–	15.4 kg	33.88 lbs

MULTICUBE QCP1 FOR M520 QUATRO — SUITABLE FITTINGS: CON47

Series	Code	A		B		C		Weight	
M520 QUATRO	QCP1	527.7 mm	20.78"	–	–	–	–	24.5 kg	53.90 lbs

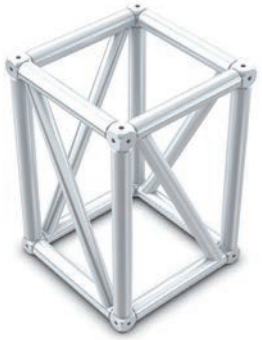

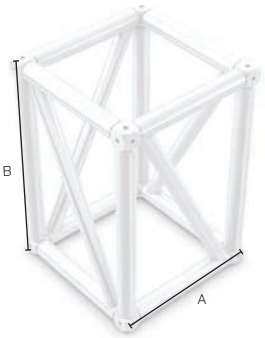

MULTICUBE RCP1 FOR M760 RECT — SUITABLE FITTINGS: CON47

Series	Code	A		B		C		Weight	
M760 RECT	RCP1	527.7 mm	20.78"	769.7 mm	30.28"	–	–	29.4 Kg	64.80 lbs

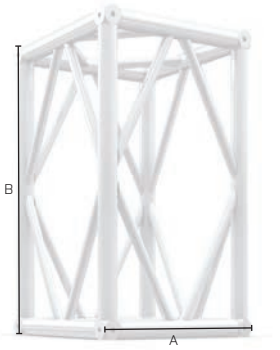

MULTICUBE RCT1 FOR M950 RECT — SUITABLE FITTINGS: CON47

Series	Code	A		B		C		Weight	
M950 RECT	RCT1	578.5 mm	22.78"	1000.0 mm	39.37"	–	–	36.2 kg	79.64 lbs

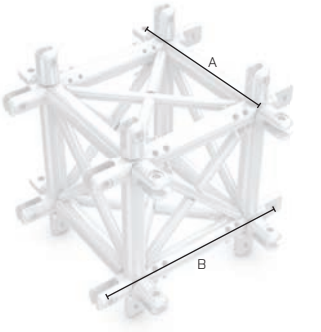

MULTICUBE 4GS-35

Series	Code	A		B		C		Weight	
4GS-35	4GS-35MC	384.0 mm	15.12"	447.0 mm	17.60"	–	–	16.9 kg	37.18 lbs

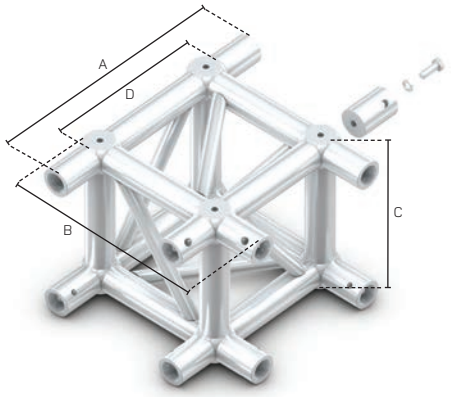

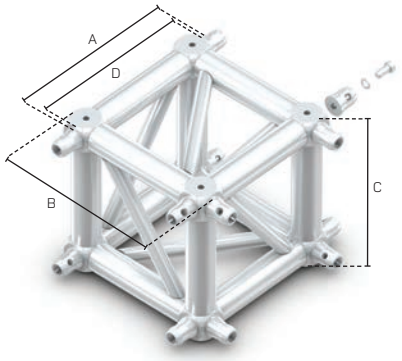

DIMENSIONS – FOR FEMALE CONNECTOR USE

Cube type	A	B	C	D
M222	322.0mm/12.68"	272.0mm/10.71"	222.0mm/8.74"	222.0mm/8.74"
M290	439.2mm/17.29"	364.2mm/14.34"	289.2mm/11.39"	289.2mm/11.39"
M290LGT	439.2mm/17.29"	364.2mm/14.34"	289.2mm/11.39"	289.2mm/11.39"
M390	538.4mm/21.20"	463.4mm/18.24"	388.4mm/15.29"	388.4mm/15.29"
M390LGT	538.4mm/21.20"	463.4mm/18.24"	388.4mm/15.29"	388.4mm/15.29"
M400	537.0mm/21.14"	447.0mm/17.60"	357.0mm/14.06"	357.0mm/14.06"
M400 RECT	445.0mm/7.52"	354.9mm/13.97"	357.0mm/14.06"	264.9mm/10.43"
M520	707.7mm/27.86"	617.7mm/24.32"	527.7mm/20.76"	527.7mm/20.76"
M760	707.7mm/27.86"	617.7mm/24.32"	769.7mm/30.30"	527.7mm/20.76"
M950 RECT	757.7mm/29.83"	667.7mm/26.29"	999.2mm/39.34"	577.7mm/22.74"

DIMENSIONS – FOR MALE HALF CONNECTOR USE

Cube type	A	B	C	D
M222	226.0mm/8.90"	223.0mm/8.78"	222.0mm/8.74"	222.0mm/8.74"
M290	291.2mm/11.46"	290.2mm/11.43"	289.2mm/11.39"	289.2mm/11.39"
M290LGT	291.2mm/11.46"	290.2mm/11.43"	289.2mm/11.39"	289.2mm/11.39"
M390	390.4mm/15.37"	389.4mm/15.33"	388.4mm/15.29"	388.4mm/15.29"
M390LGT	390.4mm/15.37"	389.4mm/15.33"	388.4mm/15.29"	388.4mm/15.29"

FEMALE CONNECTORS

Cube type	CON code	Female connector	Bolt	Washer	Shoulder length
M222	CON46	M Multicube	M10x25 HEX	d10.2/18.1	50.0mm/1.97"
M290 M390	CON25B	B Multicube	M12x35 HEX	d12.2/21	75.0mm/2.95"
	CON25F	F Multicube	M12x35 HEX	d12.2/21	75.0mm/2.95"
	CON25U	U Multicube	M12x35 HEX	d12.2/21	75.0mm/2.95"
M290LGT M390LGT	CON64B	B Multicube-K6x10	M12x35 HEX	d12.2/21	75.0mm/2.95"
	CON64F	F Multicube-K6x10	M12x35 HEX	d12.2/21	75.0mm/2.95"
	CON64U	U Multicube-K6x10	M12x35 HEX	d12.2/21	75.0mm/2.95"
M400 M520 M760 M950	CON47	O Multicube	M16x40 HEX	d16.2/27.4	90.0mm/3.54"

MALE HALF CONNECTORS

Cube type	CON code	Female connector	Bolt	Washer	Shoulder length
M222	CON62	MM-D10-steel	M10x16 HEX; 8.8	d10.2/16	1.0mm/0.04"
M290 M390	CON56B	BM-D12-steel	M12x25 HEX; 10.9	d12.2/18	1.0mm/0.04"
	CON56F	FM-D12-steel	M12x25 HEX; 10.9	d12.2/18	1.0mm/0.04"
	CON56U	UM-D12-steel	M12x25 HEX; 10.9	d12.2/18	1.0mm/0.04"
M290LGT M390LGT	CON63B	BM/D12-steel-K6x10	M12x25 HEX; 10.9	d12.2/18	1.0mm/0.04"
	CON63F	FM/D12-steel-K6x10	M12x25 HEX; 10.9	d12.2/18	1.0mm/0.04"
	CON63U	UM/D12-steel-K6x10	M12x25 HEX; 10.9	d12.2/18	1.0mm/0.04"

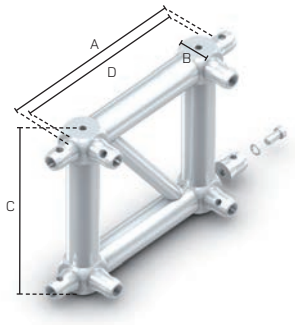

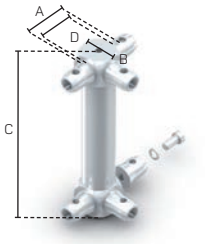

DIMENSIONS – FOR MALE CONNECTOR USE – TYPE QC/BC

Cube type	A	B	C	D
QC/BC-M222	224.0mm/8.82"	33.8mm/1.33"	222.0mm/8.74"	222.0mm/8.74"
QC/BC-M290	291.2mm/11.47"	50.6mm/1.99"	289.2mm/11.39"	289.2mm/11.39"
QC/BC-M390	390.4mm/15.37"	50.6mm/1.99"	388.4mm/15.29"	388.4mm/15.29"

DIMENSIONS – FOR MALE CONNECTOR USE – TYPE BC

Cube type	A	B	C	D
BC-M222	34.8mm/1.37"	33.8mm/1.33"	222.0mm/8.74"	32.8mm/1.29"
BC-M290	51.6mm/2.03"	50.6mm/1.99"	289.2mm/11.39"	49.6mm/1.95"
BC-M390	51.6mm/2.03"	50.6mm/1.99"	388.4mm/15.29"	49.6mm/1.95"

MALE CONNECTOR USE – TYPE QC/BC

Cube type	CON code	Male connector	Bolt	Washer	Shoulder length
M222	CON62	MM-D10-steel	M10x16. HEX; 8.8	d10.2/16	1.0mm/0.04"
M290 M390	CON56B	BM-D12-steel	M12x25. HEX; 10.9	d12.2/18	1.0mm/0.04"
	CON56F	FM-D12-steel	M12x25. HEX; 10.9	d12.2/18	1.0mm/0.04"
	CON56U	UM-D12-steel	M12x25. HEX; 10.9	d12.2/18	1.0mm/0.04"

MALE CONNECTOR USE – TYPE BC

Cube type	CON code	Male connector	Bolt	Washer	Shoulder length
M222	CON62	MM-D10-steel	M10x16. HEX; 8.8	d10.2/16	1.0mm/0.04"
M290 M390	CON56B	BM-D12-steel	M12x25. HEX; 10.9	d12.2/18	1.0mm/0.04"
	CON56F	FM-D12-steel	M12x25. HEX; 10.9	d12.2/18	1.0mm/0.04"
	CON56U	UM-D12-steel	M12x25. HEX; 10.9	d12.2/18	1.0mm/0.04"

Note:
Female and male connectors supplied separate from multicubes. To calculate the number of connectors required, determine how many directions (ways) the cube is to be configured and multiply this number by 4. (i.e. 4-way junction requires 16 connectors)

Connected

Bookcorners

Connected

Book corners for M290 - M520 / 4GS-35

- Book-corners provide an angular solution to an acute problem
- Corners can be configured for TRIO or QUATRO formats
- Rigid aluminium profile construction with bolted male or female receivers
- Free range of 0-180° angle adjustability

QBB1	Bookcorner for M290
Series	Can be attached for use with M290 QUATRO and TRIO (apex up/down) formats.
M290	Weight = 6.15 kg (13.55 lbs)

QBK1	Bookcorner for M390
Series	Can be attached for use with M390 QUATRO and TRIO (apex up/down) formats.
M390	Weight = 8.61 kg (18.98 lbs)

QBO1	Bookcorner for M400
Series	Can be attached for use with M400 QUATRO or RECT series.
M400	Weight = 6.89 kg / (15.19 lbs)

FBP1	Bookcorner for M520 Fold
Series	Can be attached for use with M520 FOLDING.
M520	Weight = 16.22 kg (35.75 lbs)

Note:
Book corners are not structural components and must be supported on both sides of the frame to ensure safe operation. If the angle of the bookcorner needs to be locked in one position, contact the MILOS Design Center for exact dimensions.

4GS-35BC-V	Bookcorner for 4GS-35 vertical
Series	Can be used with 4GS-35
4GS-35	Weight = 7.90 kg (17.41 lbs)

4GS-35BC-H	Bookcorner for 4GS-35 horizontal
Series	Can be used with 4GS-35
4GS-35	Weight = 7.90 kg (17.41 lbs)

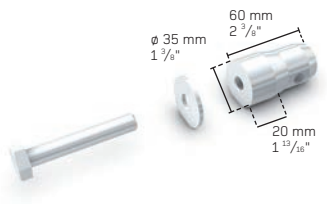

CON70	Male fitting
Series	Inculding M12x75 bolt and washer for M290/M390 F & U compatible versions available
M290 M390	Weight = 0.23 kg (0.51 lbs)

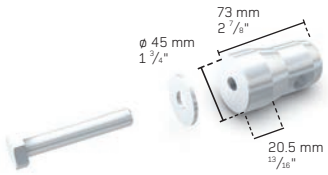

CON71	Male fitting
Series	Including M12x75 bolt and washer for M400
M400	Weight = 0.34 (0.75 lbs)

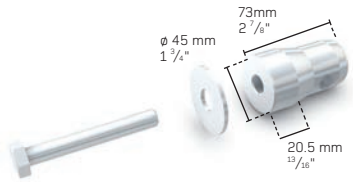

CON72	Male fitting
Series	Including M16x90 bolt and washer for M520
M520 FOLD	Weight = 0.36 kg (0.79 lbs)

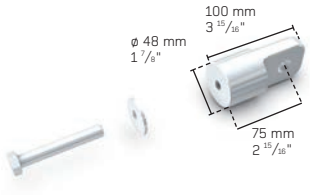

CON164	For bookcorner 4GS-35-BC-V
Series	Supplied with washer and M12x80 bolt
4GS-35	Weight = 0.42 kg (0.93 lbs)

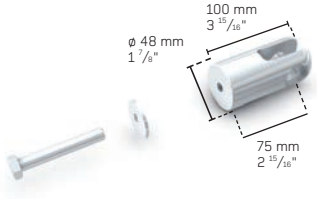

CON165	For bookcorner 4GS-35-BC-H
Series	Supplied with washer and M12x80 bolt
4GS-35	Weight = 0.44 kg (0.96 lbs)

CONNECTORS

Cube type	CON code	Male half connector	Bolt	Washer	Connector length
M290	CON70B	B/M12 (al)	M12x75 HEX	d13/37 large	20mm/0.79"
	CON70F	F/M12 (al)	M12x75 HEX	d13/37 large	20mm/0.79"
	CON70U	U/M12 (al)	M12x75 HEX	d13/37 large	20mm/0.79"
M390	CON70B	B/M12 (al)	M12x75 HEX	d13/37 large	20mm/0.79"
	CON70F	F/M12 (al)	M12x75 HEX	d13/37 large	20mm/0.79"
	CON70U	U/M12 (al)	M12x75 HEX	d13/37 large	20mm/0.79"
M400	CON71	O/M12 (al)	M12x75 HEX	d13/37 large	20mm/0.79"
M520 Fold	CON72	O/M16 (al)	M16x90 HEX	d17/50 large	20mm/0.79"
	CON164	EYE GS-75, M12	M12x80 HEX	d13/37 large	75mm/2.95"
4GS-35	CON165	FORK GS-75, M12	M12x80 HEX	d13/37 large	75mm/2.95"

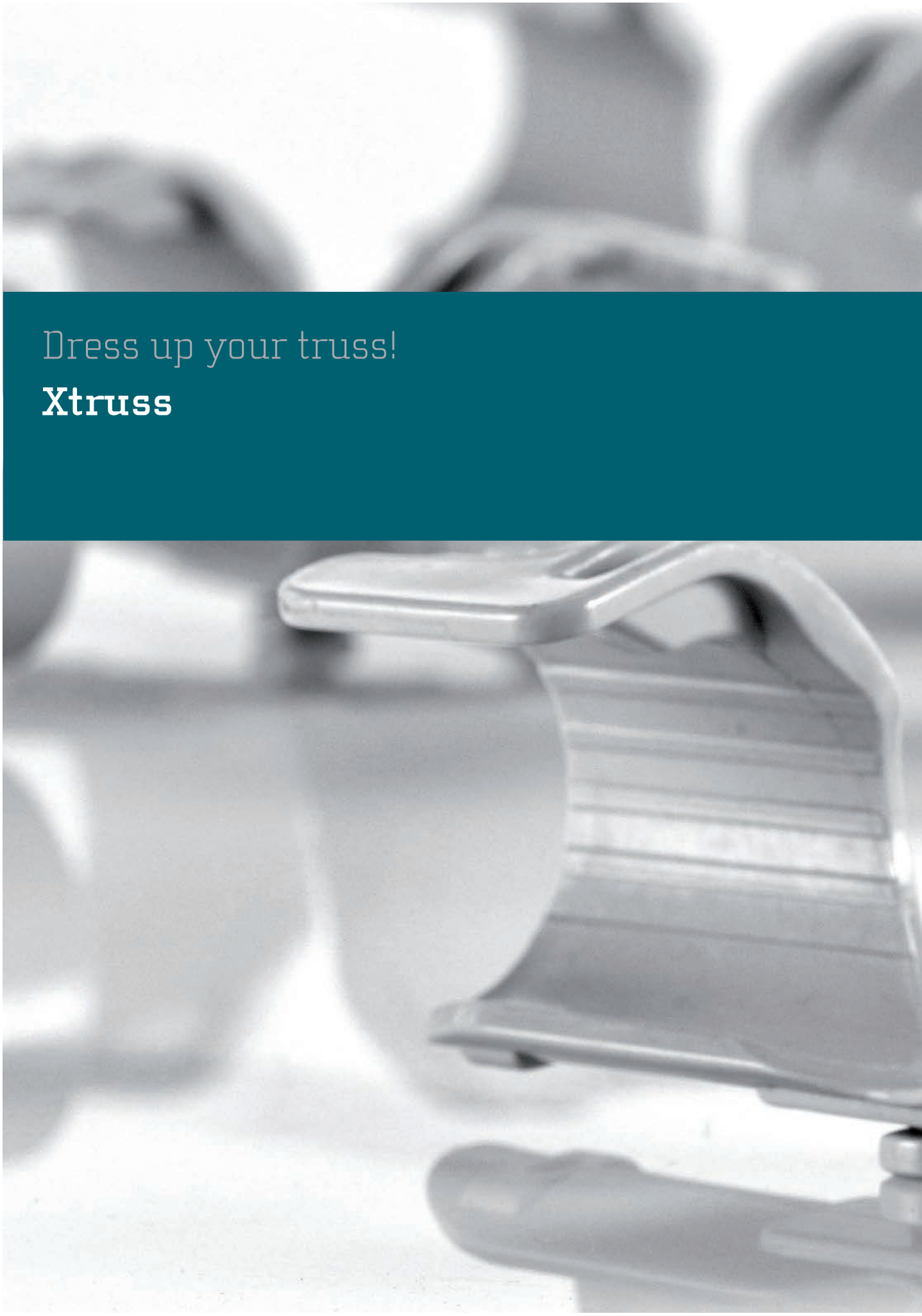

Dress up your truss!

Xtruss

Dress up your truss!

Xtruss

- Xtruss gives you a quick and easy solution for attaching any fabric size to your exhibition truss
- A wide selection of accessories allows for flexibility and multipurpose use
- Compatible with all truss made from 32, 50 or 50.8 mm / 1.26'', 1.97'' or 2'' main tubes and less than 20 mm /0.79'' diameter braces
- Allows for complete cladding of entire structures
- Satisfy structural requirements / regulations of exhibit venues and organisors

XT222FC	Fabric profile claw – M222 (32mm, 1.26" tube)
Series	See page 68 for details of use.
M222	Weight = 0.04 kg (0.09 lbs)

XT290FC	Fabric profile claw – M290B (50mm, 1.97" tube)
Series	See page 68 for details of use.
M290	Weight = 0.07 kg (0.15 lbs)

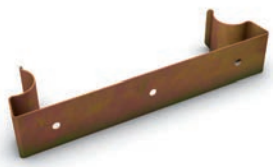

XT222CLIP	Panel clip for M222 truss
Series	Can be used for various cladding applications. Top of clip available with velcro.
M222	Weight = 0.18 kg (0.40 lbs)

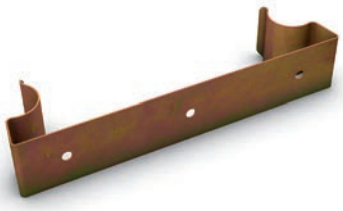

XT290CLIP	Panel clip for M290B trusss
Series	Can be used for various cladding applications. Top of clip is available with velcro.
M290	Weight = 0.25 kg (0.55 lbs)

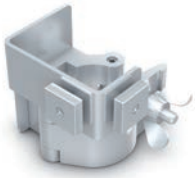

XT222FP-AD90° -OS	Clamp for outer angle banner application
Series	See page 68 figure 1 for details of use.
M222	Weight = 0.15 kg (0.33 lbs)

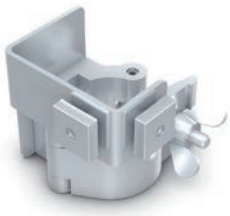

XT290FP-AD90° -OS	Clamp for outer angle banner application
Series	See page 68 figure 1 for details of use.
M290	Weight = 0.23 kg (0.51 lbs)

XT222FP-AD90° -IS	Clamp for inner angle banner application
Series	See page 68 figure 3 for details of use. Weight = 0.16 kg (0.35 lbs)
M222	

XT290FP-AD90° -IS	Clamp for inner angle banner application
Series	See page 68 figure 3 for details of use. Weight = 0.23 kg (0.51 lbs)
M290	

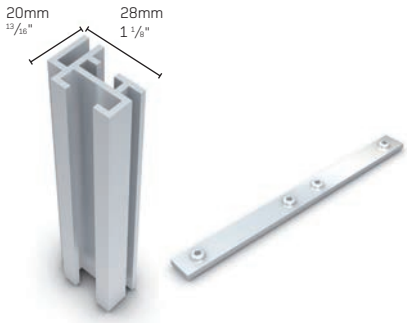

XTFP01	Fabric profile with connector
Series	See page 68 for details of use. Weight = 0.26 kg/m (0.19 lbs/ft)
M222 M290	

XT222BR	Bracket for cladding or attachment of foot
Series	Weight = 0.37 kg (0.82 lbs)
M222	

XT290BR	Bracket for cladding or attachment of foot
Series	Weight = 0.53 kg (1.17 lbs)
M290	

XTFP01CP-OS XTFP01CP-IS	Fabric corner profile with connector - outer/inner
Series	Weight = 0.13 kg (0.29 lbs)
M222 M290	

XT222FP-AD-UC	Clamp for under junction use or connection of parallel profiles
Series	See figures 2,4 and 5 on page 70 for details of use. Weight = 0.16 kg (0.35 lbs)
M222	

XT290FP-AD-UC	Clamp for under junction use or connection of parallel profiles
Series	Weight = 0.16 kg (0.35 lbs)
M290	

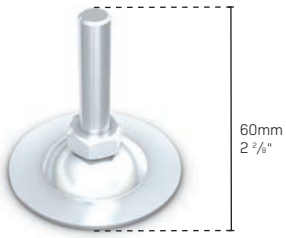

XTFOOTADJ	Steel foot with variable height
Series	Weight = 0.09 kg (0.20 lbs)
M290	

Intelligent and intuitive
Xtruss - Design ideas

Fabric Profile 01 is mounted on the fabric profile claw. The claw is twisted onto the truss and slipped onto a brace. The profile frame is than ready to be covered with fabric. A silicone profile must be stitched to the outer edges of the fabric to enable a push-fit into profile for tensioning.

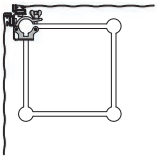

1

XT222FP-AD90°-OS/XT290FP-AD90°-OS

Xtruss 90° outside corner adapter.

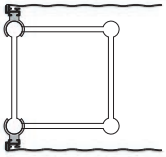

2

XT222FC/XT290FC

Fabric cladding of two sides with Fabric Profile Claws.

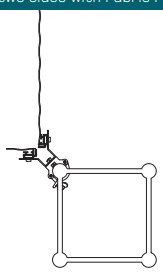

3

XT222FP-AD90°-IS/XT290FP-AD90°-IS

Xtruss 90° inside corner adapter.

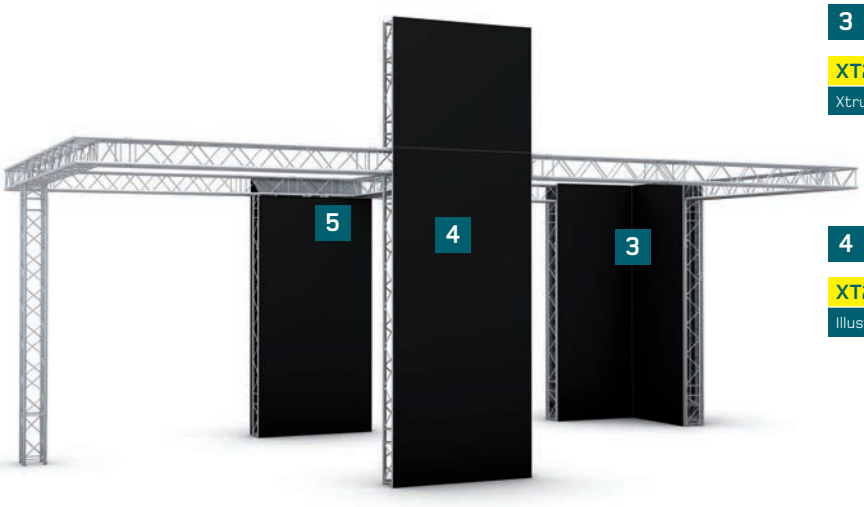

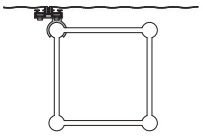

4

XT222FP-AD-UC180°/XT290FP-AD-UC180°

Illustration of 180° Fabric Profile Adapter.

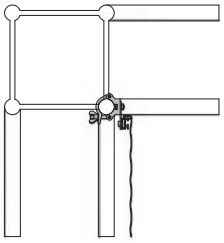

5

XT222FP-AD-UC/XT290FP-AD-UC

Xtruss Profile Adapter for use under truss junctions.

Large graphics formats without gaps

System variability with minimal booth space requirements

Circlin´ around you

Circles and ellipses

Circlin´ around you
Circles and ellipses

- Curved profiles add bespoke style to any area or exhibit
- Precision CNC rolling process to create any radius from 750mm upwards
- Fast connection for quick, simple and secure assembly
- Powder coat colour finish available on request

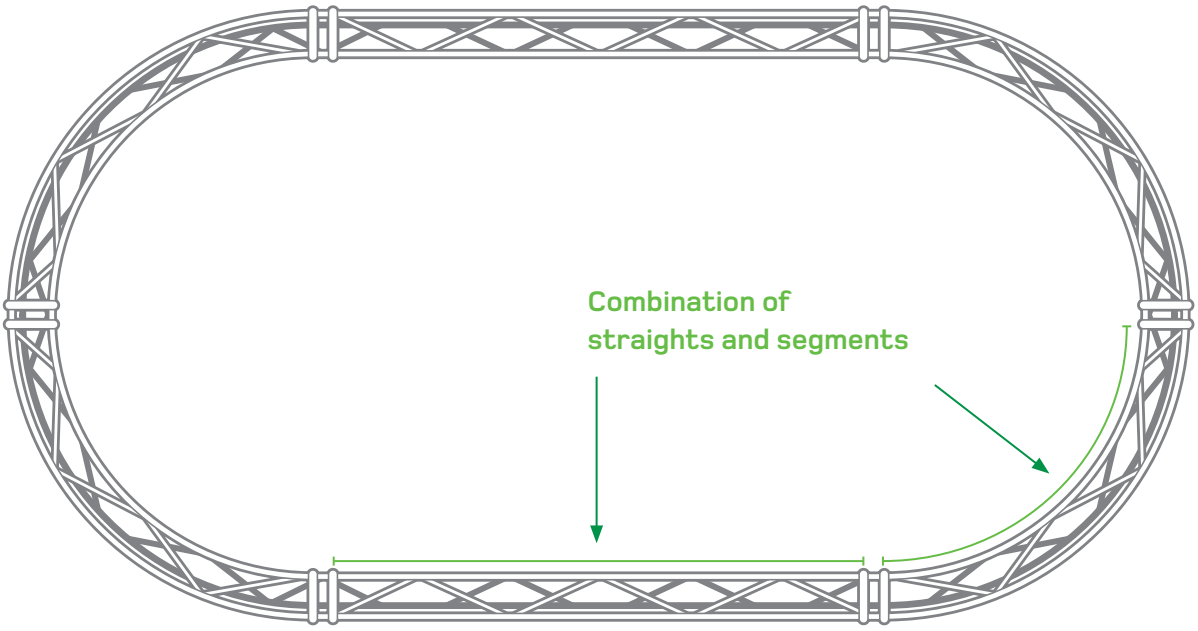

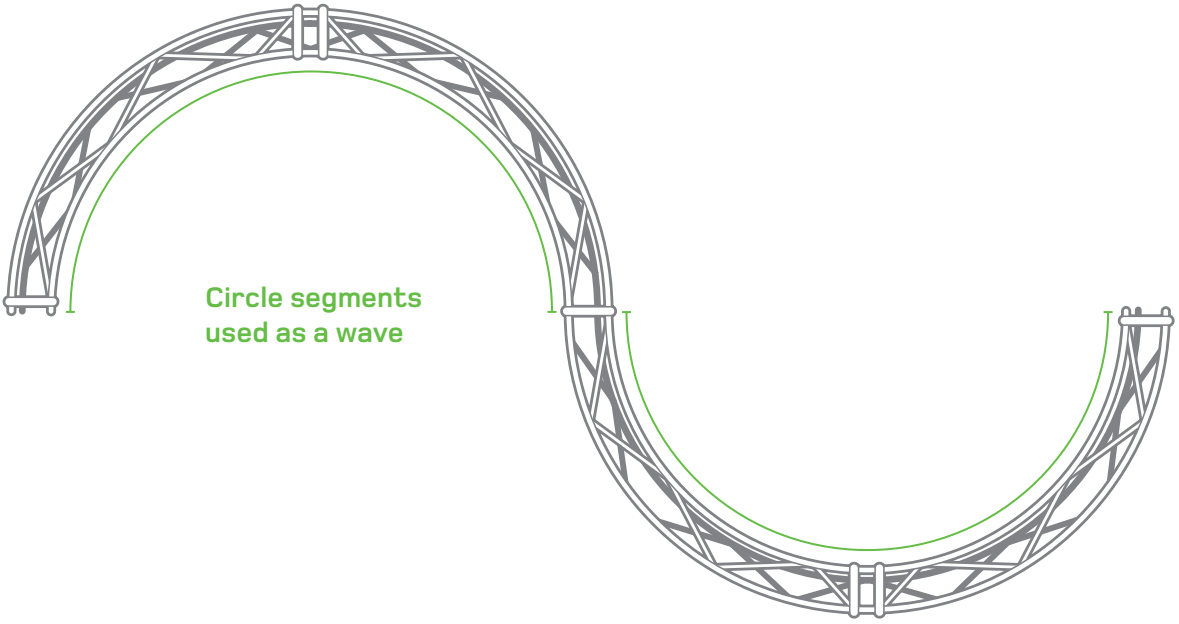

When ordering a circle please note the following:

1. Outer diameter

a) Minimum diameter is 1.4-1.5 m / 4.6-4.9 feet.
b) There is no maximum diameter limit.

2. System

a) M222 b) M290 B or V c) M390 K or L
d) M400 e) M520* f) M760*
g) M950*

* Minimum diameter is 4 metres / 13.12 feet

3. Format / Position (See Diagrams)

a) DUO (Flat) – Horizontal or Vertical.
b) TRIO (Triangular) – Apex up / down, Apex in or Apex out.
c) QUATRO (Box) – Standard.

4. Number of Segments

a) Increments of four (4) allow the most reconfiguration flexibility. This also allows a circle to be used complete, as ¼, ½ or ¾'s or together with standard straight lengths and junctions.
b) Longest curved segment is 3.2 m / 10.5 feet.

Circles are hand made and therefore subject to higher tolerances. When brace positions matter, kindly specify required set up when placing your order.

DUO CURVED IN HORIZONTAL POSITION

DUO CURVED IN VERTICAL POSITION

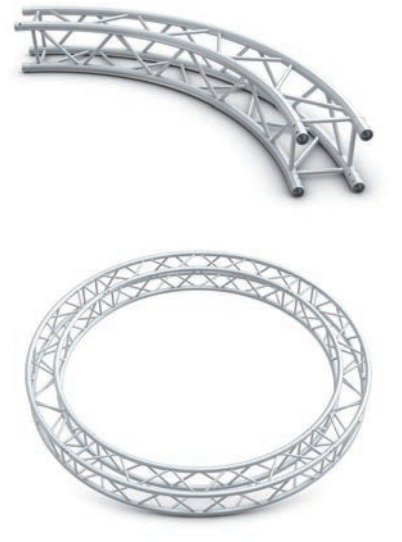

QUATRO CURVED

TRIO CURVED / APEX DOWN (OR USE AS UP)

TRIO CURVED / APEX IN

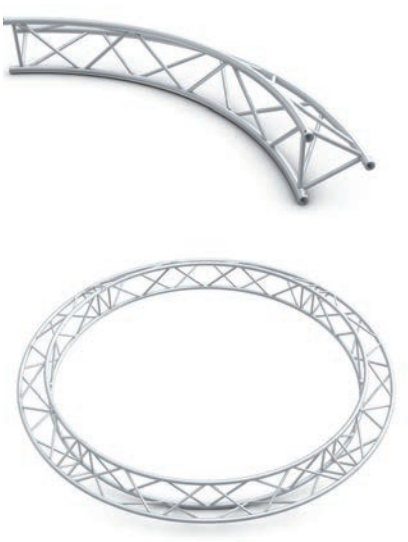

TRIO CURVED / APEX OUT

Milos. Works better.

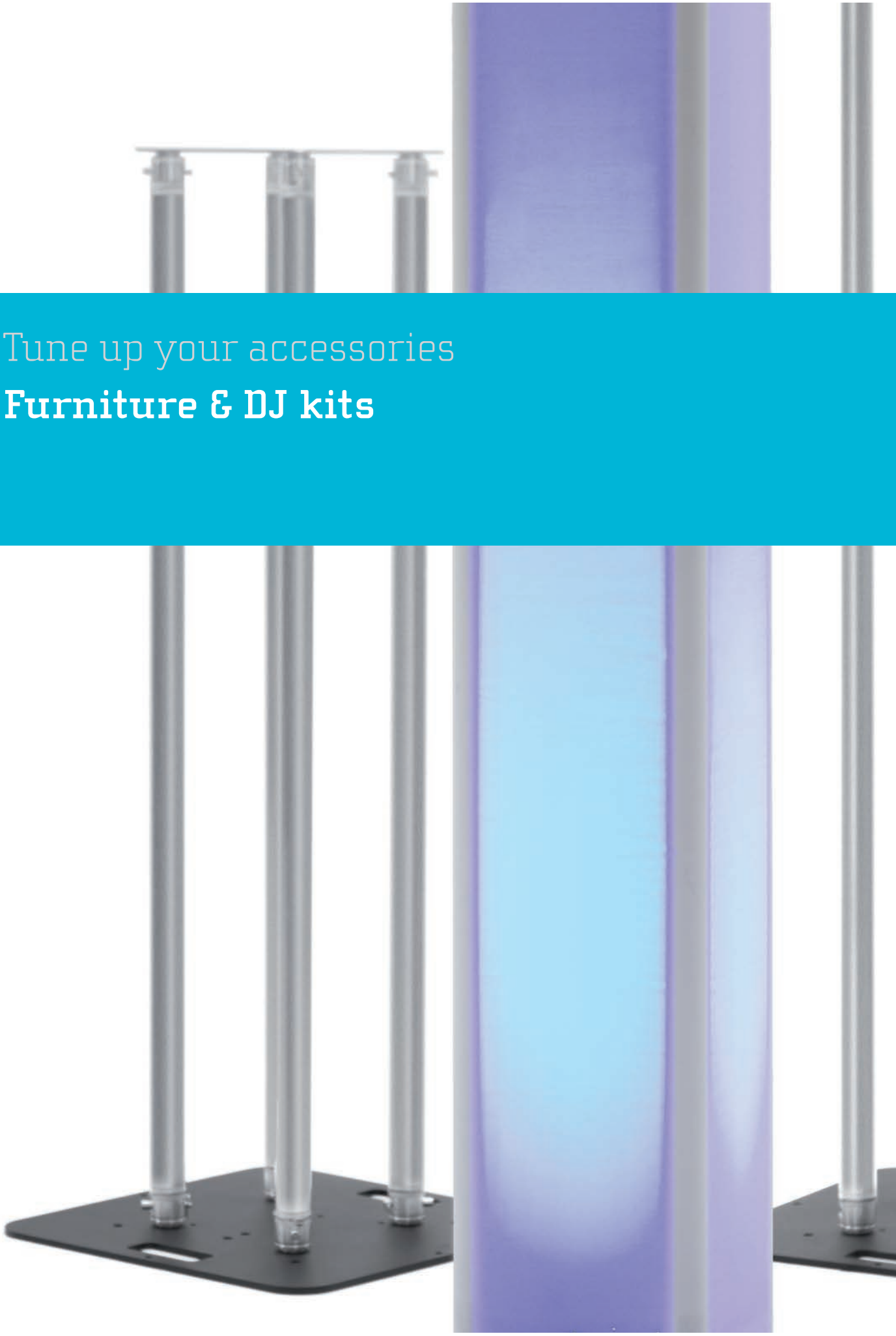

Tune up your accessories

Furniture & DJ kits

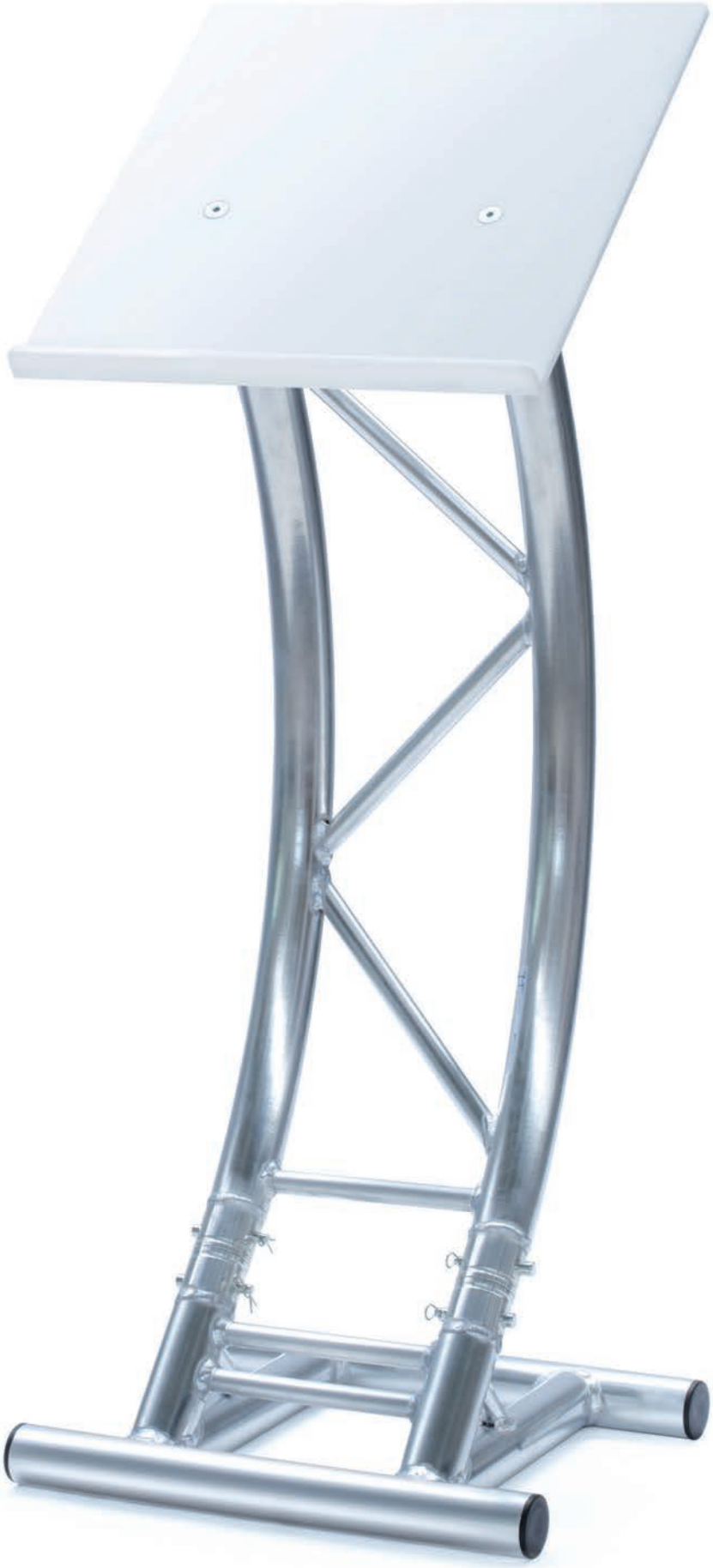

Tune up your accessories
Furniture & DJ kits

- Moving light masts and totems
- Lecterns and display plinths
- Truss socks & sleeves
- Truss bar stools & tables

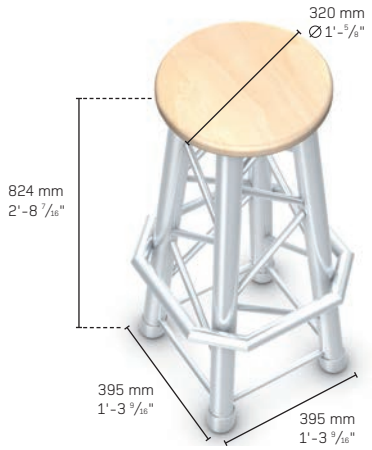

FURNITURE	Aluminium bar stool
Series	With square leg base Each leg has a plastic cap for floor protection Weight = 6.30 kg (13.88 lbs)
MMD115	

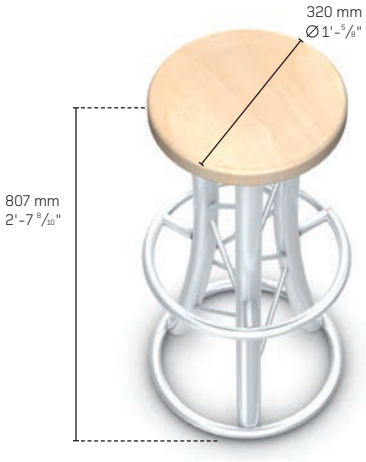

FURNITURE	Aluminium bar stool
Series	With curved legs
MMD125	Weight = 6.00 kg (13.22 lbs)

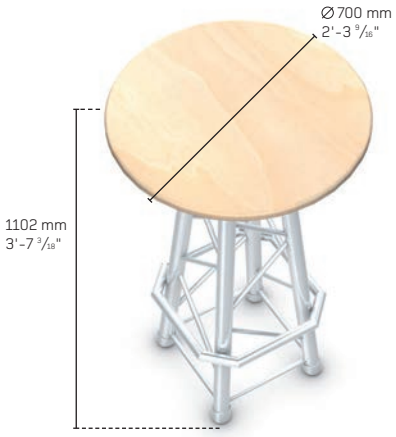

FURNITURE	Aluminium bar table
Series	With square leg base Each leg has a plastic cap for floor protection Weight = 13.63 kg (30.04 lbs)
MMD116	

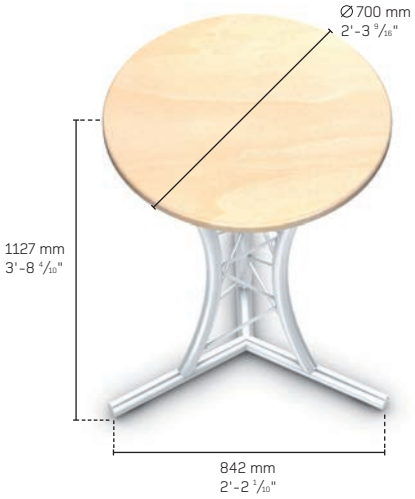

FURNITURE	Aluminium bar table
Series	With curved legs
MMD162	Weight = 11.60 kg (25.57 lbs)

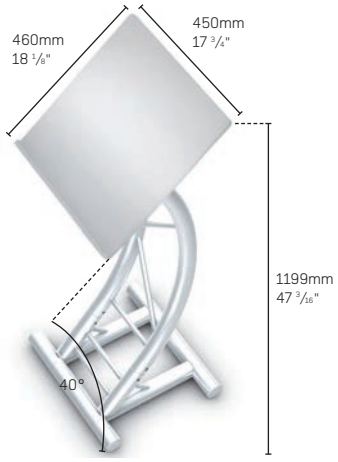

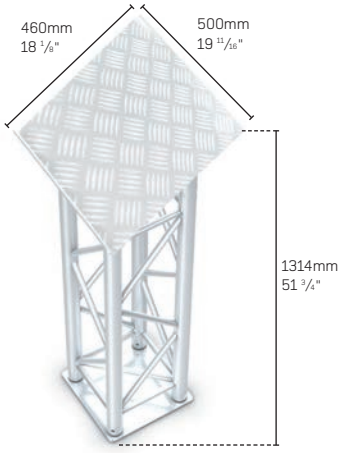

DJ KITS	Curved lectern
Series	Includes replaceable top made of sheet aluminium with pencil stop.
MMD141B	Curved legs. Weight = 7.00 kg (15.43 lbs)

DJ KITS	Rectangular lectern
Series	Includes replaceable top made of sheet aluminium with pencil stop.
MMD143B	Square leg base. Weight = 12.20 kg (26.89 lbs)

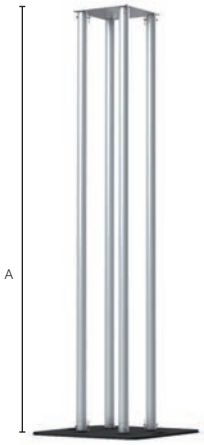

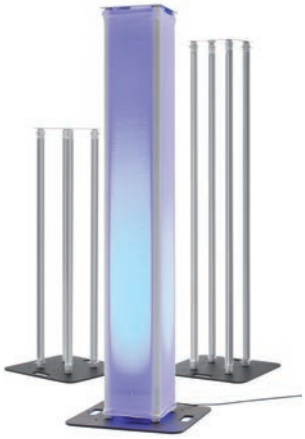

GLOW TOTEMS	height		weight		tubes		plates	sleeve
GlotemM100B-1500	1.5 m	4´ - 11.10"	36.00 kg	79.35 lbs	50 x 2 mm	2"x0.08"	Top: BBPQC	Black or white stretch fabric, B1 fire-retardant
GlotemM100B-2000	2.0 m	6' - 6.70"	37.50 kg	82.65 lbs	50 x 2 mm	2"x0.08"		
GlotemM100B-2500	2.5 m	8' - 2.40"	39.00 kg	85.96 lbs	50 x 2 mm	2"x0.08"	BP-600x600x10|QTB	

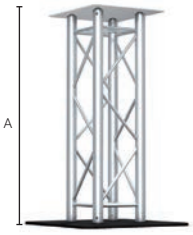

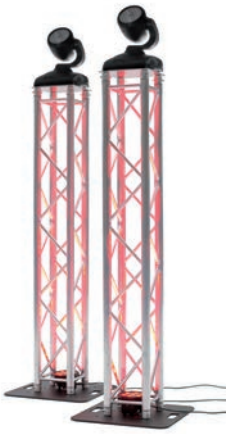

TRUSS TOTEMS	height		weight		tubes		plates	truss series
MMD132B-1000	1.0 m	3' - 3.40"	34.60 kg	76.26 lbs	50 x 2 mm	2"x0.08"	Top: BBPQC	M290 QUATRO
MMD132B-2000	2.0 m	6' - 6.70"	41.00 kg	90.36 lbs	50 x 2 mm	2"x0.08"		
MMD132B-3000	3.0 mv	9' - 10.10"	46.50 kg	102.49 lbs	50 x 2 mm	2"x0.08"	BP-600x600x10|QTB	

Add your creativity

Truss Accessories

Add your creativity
Truss Accessories

- All types of connectors
- Aluminium base plates
- Heavy-duty plates
- Male & female cube connectors
- Ceiling supports
- Plastic clips
- Connection sets

CCM	Conical connector M
Series	
M222	Weight = 0.06 kg (0.13 lbs)

PM	Pin M
Series	
M222	Weight = 0.02 kg (0.04 lbs)

PMM6	Pin M with M6 thread
Series	Supplied with washer and nylock nut.
M222	Weight = 0.02 kg (0.04 lbs)

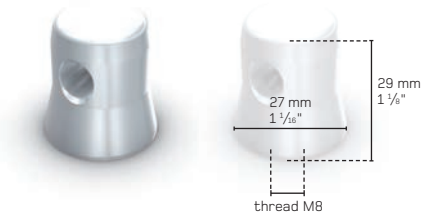

CCMM8	Half connector M with M8 thread
Series	Fixing screw not included (order separately if required)
M222	Weight = 0.03 kg (0.07 lbs)

SRPM	Safety R Clip M
Series	
M222	Weight = 0.001 kg (0.01 lbs)

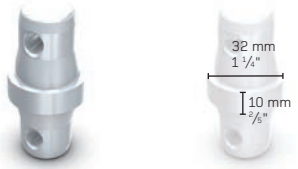

CCMD10	Spacer M 10 mm (0.39")
Series	
M222	Weight = 0.08 kg (0.18 lbs)

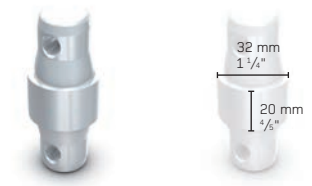

CCMD20	Spacer M 20 mm (0.79")
Series	
M222	Weight = 0.10 kg (0.22 lbs)

CCMD30	Spacer M 30 mm (1.18")
Series	
M222	Weight = 0.12 kg (0.26 lbs)

CCMD40	Spacer M 40 mm (1.58")
Series	
M222	Weight = 0.14 kg (0.31 lbs)

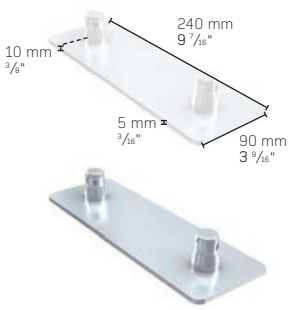

MBPDC MWPDC	Duo base plate with half connectors Duo wall plate with half connectors
Series	Wall plates have mounting holes
M222	Weight = 0.40 kg (0.88 lbs)

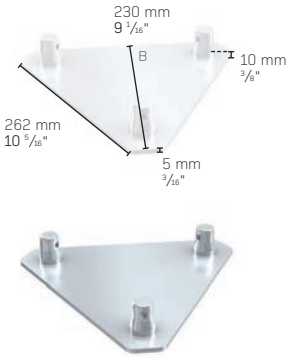

MBPTC MWPTC	Trio base plate with half connectors Trio wall plate with half connectors
Series	Wall plates have mounting holes
M222	Weight = 0.60 kg (1.32 lbs)

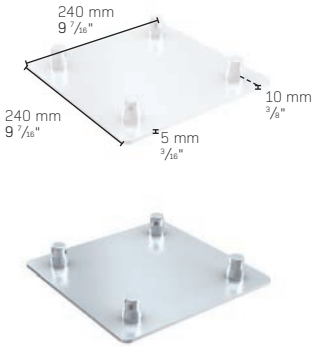

MBPQC MWPQC	Quatro base plate with half connectors Quatro wall plate with half connectors
Series	Wall plates have mounting holes
M222	Weight = 0.94 kg (2.07 lbs)

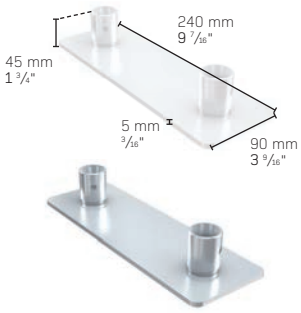

MBPD MWPD	Duo base plate with female receivers Duo wall plate with female receivers
Series	Wall plates have mounting holes
M222	Weight = 0.50 kg (1.10 lbs)

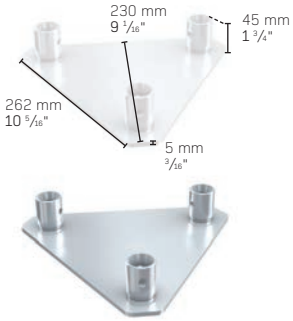

MBPT MWPT	Trio base plate with female receivers Trio wall plate with female receivers
Series	Wall plates have mounting holes
M222	Weight = 0.70 kg (1.54 lbs)

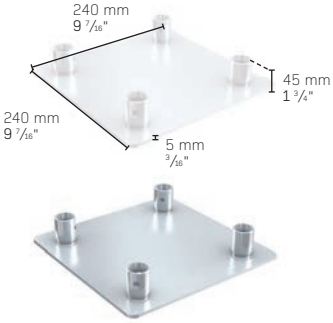

MBPQ MWPQ	Quatro base plate with female receivers Quatro wall plate with female receivers
Series	Wall plates have mounting holes
M222	Weight = 1.04 kg (2.29 lbs)

CCB	Conical connector B
Series	F & U compatible versions available
M290 M290E M390 M290x390	Weight = 0.11 kg (0.24 lbs)

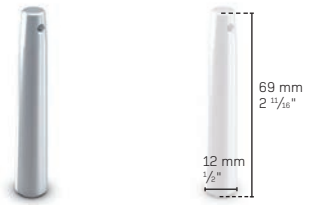

PB	Pin B
Series	
M290 M290E M390 M290x390	Weight = 0.05 kg (0.11 lbs)

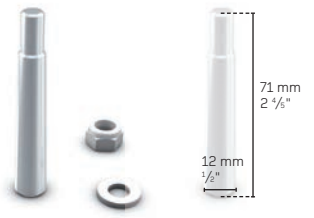

PBM8	Pin B with M8 thread
Series	Supplied with washer and nylock nut.
M290 M290E M390 M290x390	Weight = 0.08 kg (0.18 lbs)

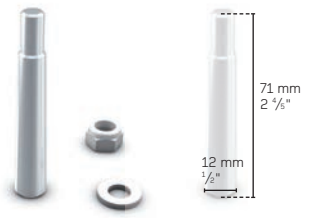

PBM8SS	Stainless steel Pin B with M8 thread
Series	Supplied with washer and nylock nut.
M290 M290E M390 M290x390	Weight = 0.08 kg (0.18 lbs)

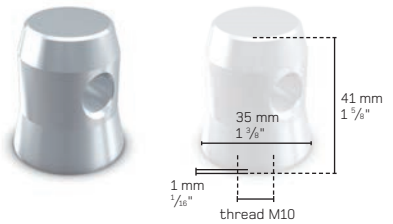

CCBM10	Half connector B with M10 thread
Series	Fixing screw not included (order separately if required) F&U compatible versions available
M290 M390 M290x390	Weight = 0.07 kg (0.15 lbs)

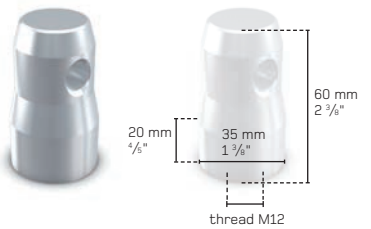

CCBM12	Half connector B with M12 thread
Series	Fixing screw not included (order separately if required) F&U compatible versions available
M290 M390 M290x390	Weight = 0.12 kg (0.26 lbs)

SRPB	Safety R Clip B
Series	
M290 M390 M290E M290x390	Weight = 0.002 kg (0.01 lbs)

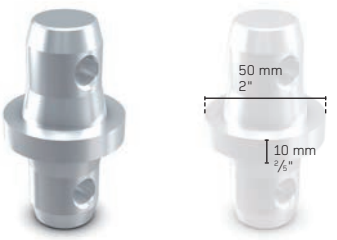

CCBD10	Spacer B 10 mm (0.39")
Series	F & U compatible versions available
M290 M390 M290x390	Weight = 0.20 kg (0.44 lbs)

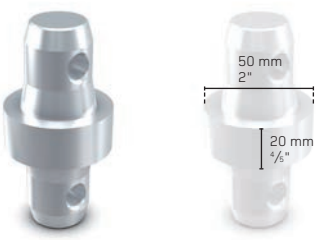

CCBD20	Spacer B 20 mm (0.79")
Series	F & U compatible version available
M290 M390 M290x390	Weight = 0.25 kg (0.55 lbs)

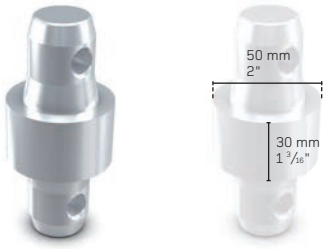

CCBD30	Spacer B 30 mm (1.18")
Series	F & U compatible version available
M290 M390 M290x390	Weight = 0.30 kg (0.66 lbs)

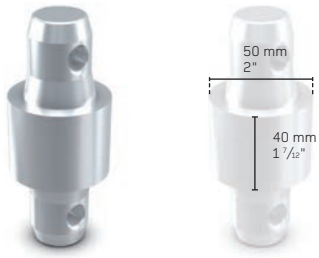

CCBD40	Spacer B 40 mm (1.58")
Series	F & U compatible version available
M290 M290E M390 M290x390	Weight = 0.36 kg (0.79 lbs)

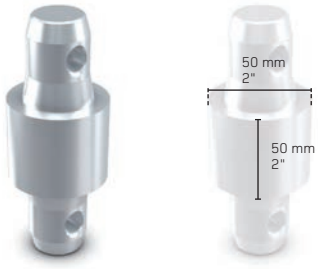

CCBD50	Spacer B 50 mm (2")
Series	Various lengths available on request F & U compatible version available
M290 M290E M390 M290x390	Weight = 0.41 kg (0.90 lbs)

CFBD105	105 mm (4.13'') female spacer
Series	F & U compatible version available
M290 M390 M290x390	Weight = 0.33 kg (0.73 lbs)

CFBD210	210 mm (8.27'') female spacer
Series	F & U compatible version available
M290 M390 M290x390	Weight = 0.68 kg (0.84 lbs)

BBPSC	Base plate with half connector
Series	F & U compatible version available
M100 M290 M390 M290x390	Weight = 0.19 kg (0.42 lbs)

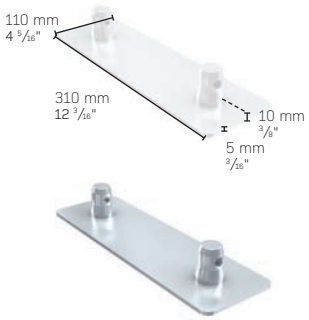

BBPDC BWPDC	Duo base plate with half connectors Duo wall plate with half connectors
Series	Wall plates have mounting holes F & U compatible versions available Weight = 0.64 kg (1.41 lbs)
M290	

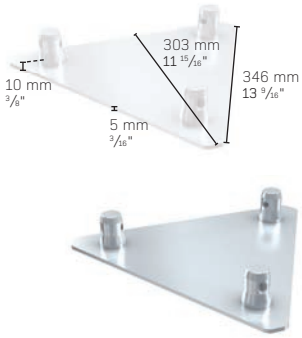

BBPTC BWPTC	Trio base plate with half connectors Trio wall plate with half connectors
Series	Wall plates have mounting holes F & U compatible versions available Weight = 1.08 kg (2.38 lbs)
M290	

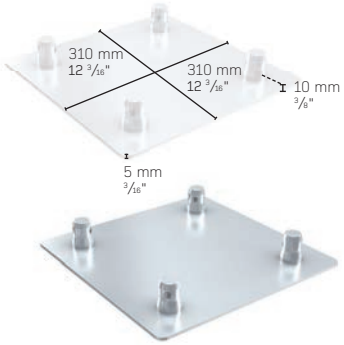

BBPQC BWPQC	Quatro base plate with half connectors Quatro wall plate with half connectors
Series	Wall plates have mounting holes F & U compatible versions available Weight = 1.65 kg (3.64 lbs)
M290	

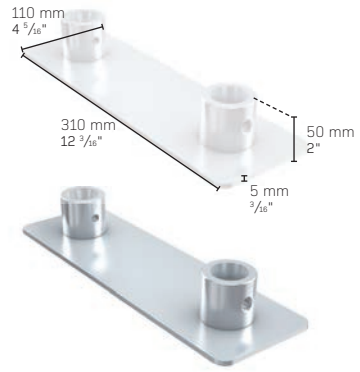

BBPD **BWPD**	**Duo base plate with female receivers** **Duo wall plate with female receivers**
Series M290	Wall plates have mounting holes F & U compatible versions available Weight = 0.74 kg (1.63 lbs)

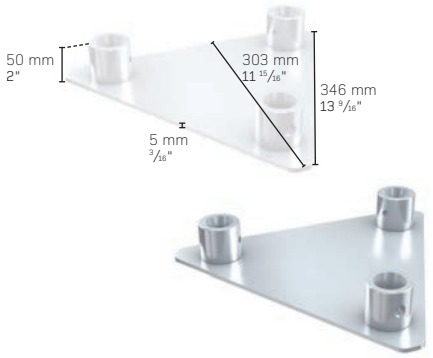

BBPT **BWPT**	**Trio base plate with female receivers** **Trio wall plate with female receivers**
Series M290	Wall plates have mounting holes F & U compatible versions available Weight = 1.23 kg (2.71 lbs)

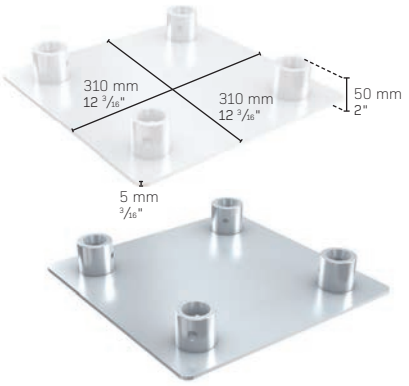

BBPQ **BWPQ**	**Quatro base plate with female receivers** **Quatro wall plate with female receivers**
Series M290	Wall plates have mounting holes F & U compatible versions available Weight = 1.86 kg (4.09 lbs)

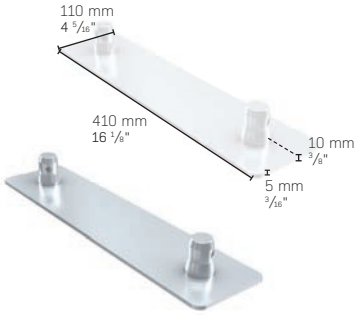

KBPDC **KWPDC**	**Duo base plate with half connectors** **Duo wall plate with half connectors**
Series M390	Wall plates have mounting holes F compatible versions available Weight = 0.79 kg (1.68 lbs)

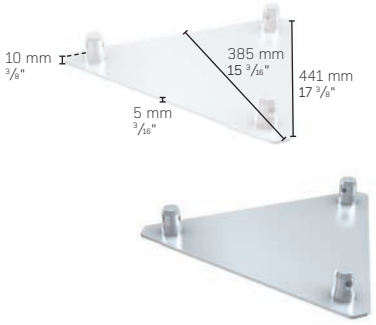

KBPTC **KWPTC**	**Trio base plate with half connectors** **Trio wall plate with half connectors**
Series M390	Wall plates have mounting holes F compatible versions available Weight = 1.57 kg (3.46 lbs)

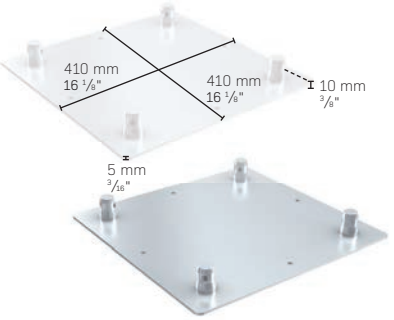

KBPQC **KWPQC**	**Quatro base plate with half connectors** **Quatro wall plate with half connectors**
Series M390	Wall plates have mounting holes F compatible versions available Weight = 2.63 kg (5.80 lbs)

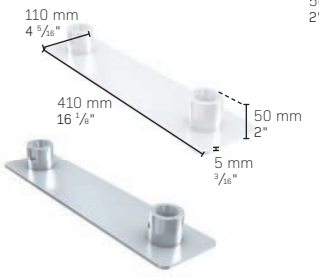

KBPD **KWPD**	**Duo base plate with female receivers** **Duo wall plate with female receivers**
Series M390	Wall plates have mounting holes F compatible versions available Weight = 0.89 kg (1.96 lbs)

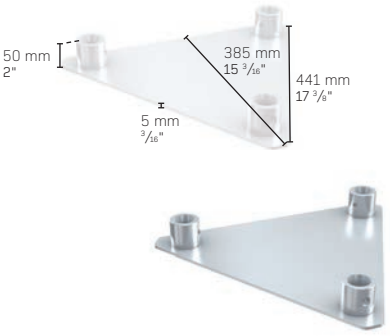

KBPT **KWPT**	**Trio base plate with female receivers** **Trio wall plate with female receivers**
Series M390	Wall plates have mounting holes F compatible versions available Weight = 1.73 kg (3.81 lbs)

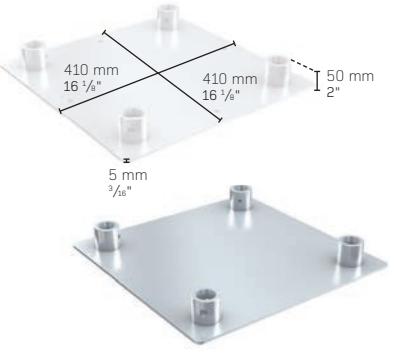

KBPQ **KWPQ**	**Quatro base plate with female receivers** **Quatro wall plate with female receivers**
Series M390	Wall plates have mounting holes F compatible versions available Weight = 2.83 kg (6.24 lbs)

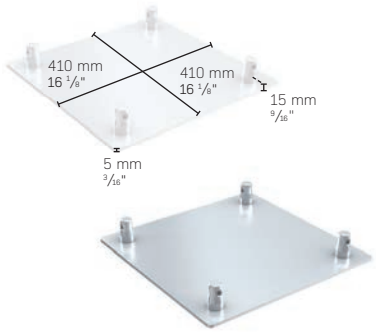

OBPQC	Quatro base plate with half connectors
Series	
M400	Weight = 3.10 kg (6.83 lbs)

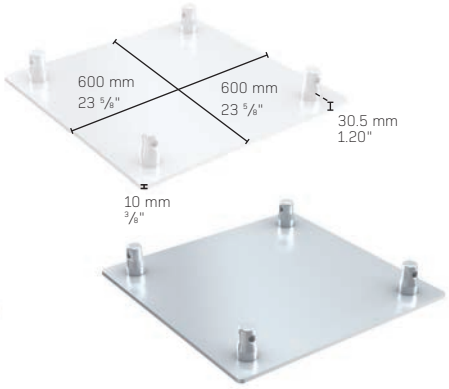

PBPQC	Quatro base plate with half connectors
Series	
M520	Weight = 10.85 kg (23.92 lbs)

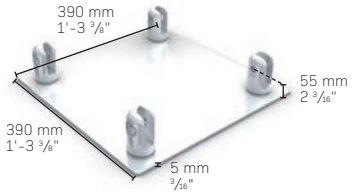

4GS-35-BPF	Female base plate
Series	
4GS-35	Weight = 2.84 kg (6.26 lbs)

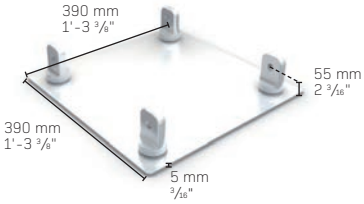

4GS-35-BPM	Male base plate
Series	
4GS-35	Weight = 2.77 kg (6.11 lbs)

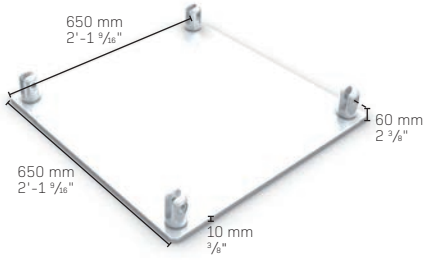

4GS-62-BPF	Female base plate
Series	
4GS-62	Weight = 12.71 kg (28.02 lbs)

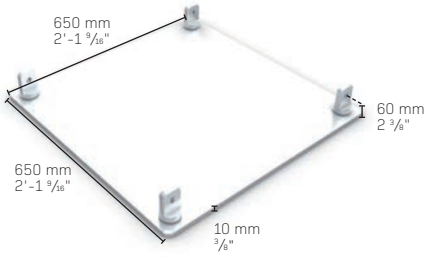

4GS-62-BPM	Male base plate
Series	
4GS-62	Weight = 12.20 kg (26.90 lbs)

BP-D800X10 |QTB	Round steel base plate with half connectors
Series	Pre-drilled holes for multiple truss ranges & shapes F & U compatible versions available Weight = 38.58 kg (85.05 lbs)
M222	
M290	
M390	

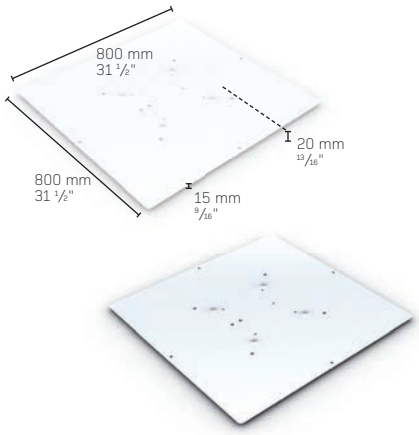

BP-800X800 X15|QTB	AL base plate with half connectors
Series	Pre-drilled holes for multiple truss ranges & shapes F & U compatible versions available Weight = 25.71 kg (56.68 lbs)
M222	
M290	
M390	

BP-600X600 X10|QTB	Steel base plate with half connectors
Series	Pre-drilled holes for multiple truss ranges & shapes F & U compatible versions available Weight = 27.14 kg (59.83 lbs)
M222	
M290	
M390	

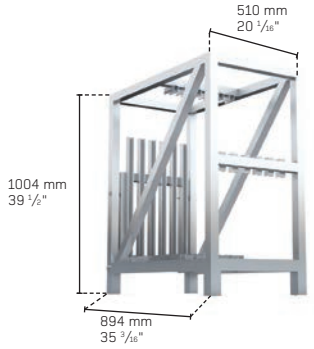

TRA-CAG|BP-D800x10	Transport cage for BP-D800x10|STEEL|QTB
Series	Holds up to 10 x BP-D800X10
M222	
M290	
M390	Weight = 25.00 kg (55.12 lbs)

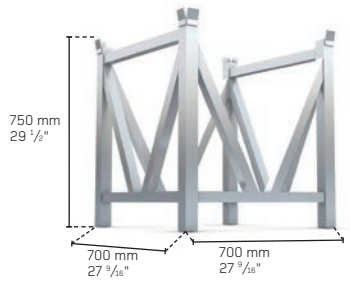

TRA-CAG|BP-600x600x10	Transport cage for BP-600x600x10|QTB
Series	Holds up to 10 x BP-600X600X10
M222	
M290	
M390	Weight = 18.00 kg (39.68 lbs)

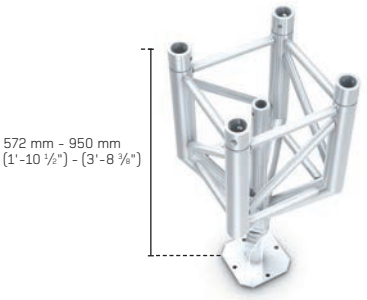

LEGM290 |572-950	Adjustable pedestal leg 572-950mm
Series	Available for M390
M290	Weight = 7.70 kg (16.97 lbs)

CCO	Conical connector O
Series	
M400	
M520	
M760	
M950	Weight = 0.30 kg (0.66 lbs)

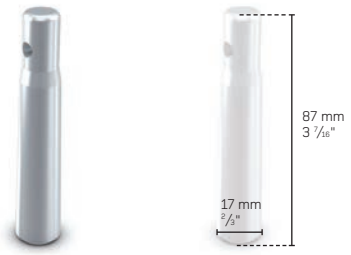

PO	Pin O
Series	
M400	
M520	
M760	
M950	Weight = 0.12 kg (0.26 lbs)

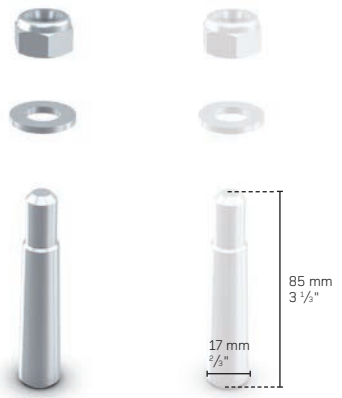

POM12	Pin O with M12 thread
Series	Supplied with washer and nylock nut.
M400	
M520	
M760	
M950	Weight = 0.12 kg (0.26 lbs)

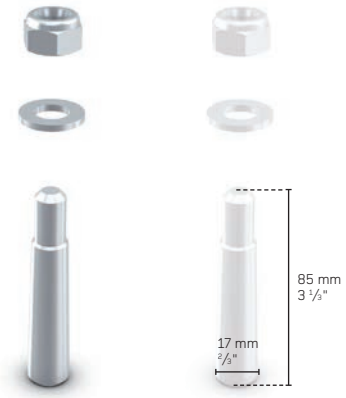

POM12SS	Stainless steel Pin O with M12 thread
Series	Supplied with washer and nylock nut.
M400	
M520	
M760	
M950	Weight = 0.12 kg (0.26 lbs)

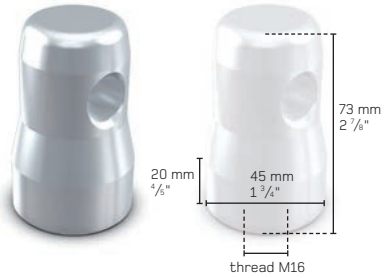

CCOM16	Half conical connector O with M16 thread
Series	Fixing screw not included (order separately if required).
M400	
M520	
M760	
M950	Weight = 0.23 kg (0.51 lbs)

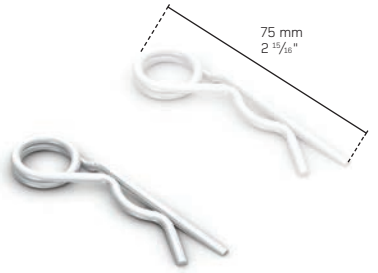

SRPO	Safety R Clip O
Series	
M400	
M520	
M760	
M950	Weight = 0.003 kg (0.01 lbs)

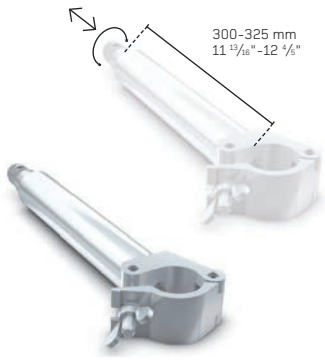

CON01-AB	Clamp extension long
Series	For 48 - 51 mm (1.89" - 2.01") tubes F & U compatible versions available
M290 M290E M390 M290x390	Weight = 1.15 kg (2.54 lbs)

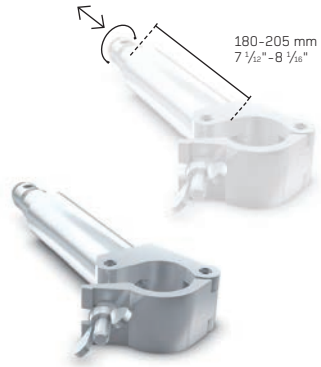

CON02-AB	Clamp extension short
Series	For 48 - 51 mm (1.89" - 2.01") tubes F & U compatible versions available
M290 M290E M390 M290x390	Weight = 1.00 kg (2.20 lbs)

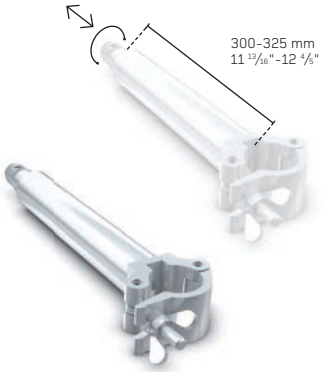

CON03B	Clamp extension long
Series	For 48 - 51 mm (1.89" - 2.01") tubes F & U compatible versions available
M290 M290E M390 M290x390	Weight = 1.08 kg (2.38 lbs)

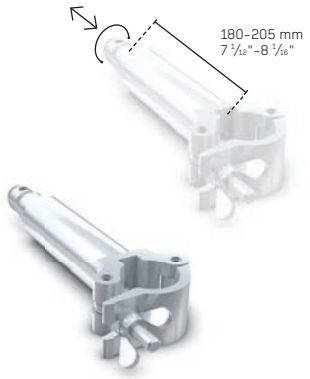

CON04B	Clamp extension short
Series	For 48 - 51 mm (1.89" - 2.01") tubes F & U compatible versions available
M290 M290E M390 M290x390	Weight = 0.94 kg (2.07 lbs)

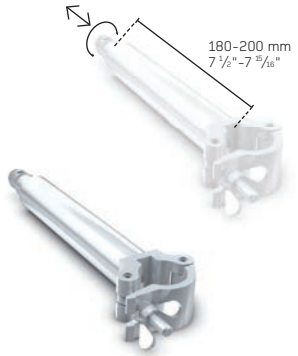

CON03M	Clamp extension long
Series	For 32 mm (1.26") tubes
M222	Weight = 0.27 kg (0.60 lbs)

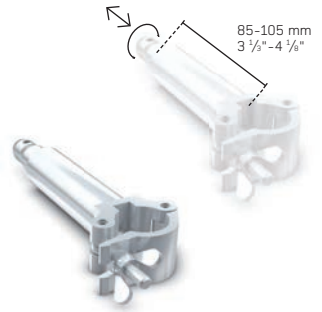

CON04M	Clamp extension short
Series	For 32 mm (1.26") tubes
M222	Weight = 0.24 kg (0.53 lbs)

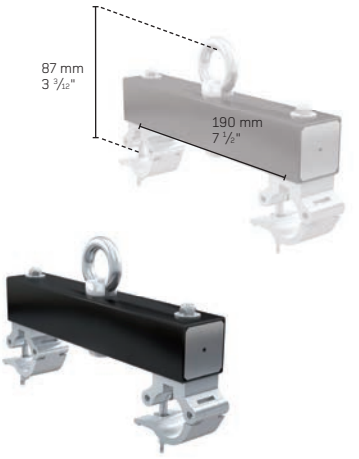

CS-M222	Ceiling support for M222
Series	SWL 200 kg (440.9 lbs)
M222	Weight = 0.97 kg (2.14 lbs)

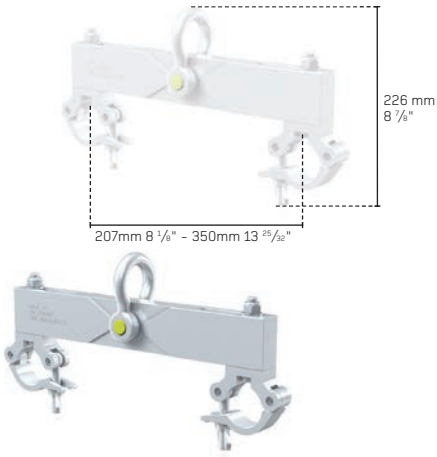

CS-M290-M400	Ceiling support for M290,M390,M400,4GS-35
Series	SWL 1000 kg (2204.2 lbs) Natural silver BGVC1/DGUV17
M290 M290E M390 M290x390 M400 4GS-35	Weight = 2.92 kg (6.44 lbs)

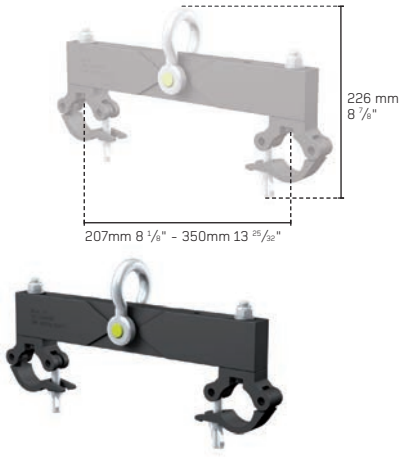

CS-M290-M400BL	Ceiling support for M290,M390,M400,4GS-35 Black
Series	SWL 1000 kg (2204.2 lbs) RAL 9005 - black, matt, smooth surface BGVC1/DGUV17
M290 M290E M390 M290x390 M400 4GS-35	Weight = 2.92 kg (6.44 lbs)

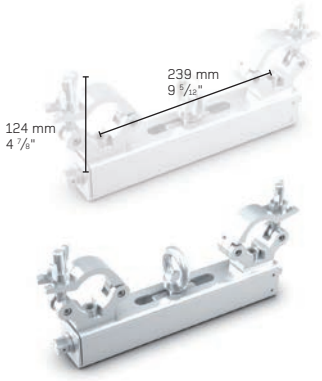

CS-M290ADJ	Ceiling support for M290 – Adjustable center of gravity
Series	SWL 749.6 lbs (340 Kg)
M290 M290E M290x390	Weight = 3.50 kg (7.71 lbs)

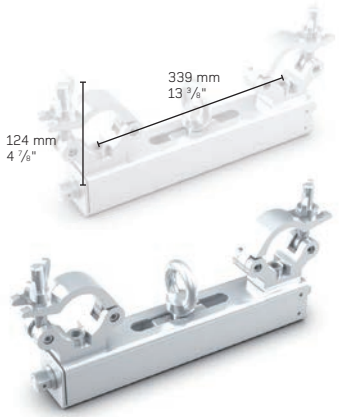

CS-M390ADJ	Ceiling support for M390 – Adjustable center of gravity
Series	SWL 749.6 lbs (340 Kg)
M390	Weight = 3.50 kg (7.71 lbs)

CON46	Female fitting for Multicube QCM1
Series	Supplied with washer and M10x25 bolt.
M222	Weight = 0.08 kg (0.18 lbs)

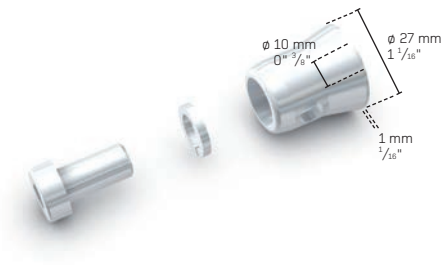

CON62	Male fitting for Multicube QCM1
Series	Supplied with washer and M10x16 bolt.
M222	Weight = 0.07 kg (0.15 lbs)

CON25B	Female fitting for Multicube QCB1, QCK1
Series	Supplied with washer and M12x35 bolt.
M290 M390 M290x390	F & U compatible versions available Weight = 0.32 kg (0.71 lbs)

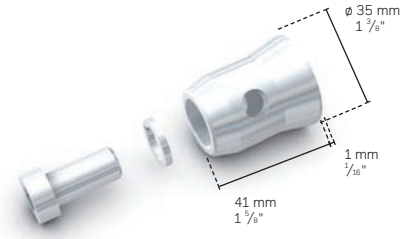

CON56B	Male fitting for Multicube QCB1, QCK1
Series	Supplied with washer and M12x25 bolt.
M290 M390 M290x390	F & U compatible versions available Weight = 0.17 kg (0.37 lbs)

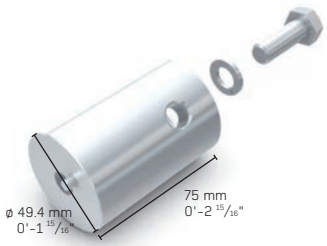

CON64B	Female fitting for Multicube QCB1 QCB1 – Light is equipped with location pin
Series	Supplied with washer and M12x35 bolt.
M290 M390 M290x390	F & U compatible version available Weight = 0.32 kg (0.71 lbs)

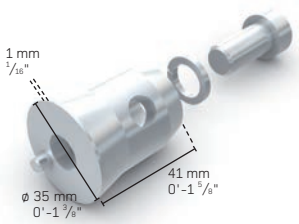

CON63B	Male fitting for Multicube QCB1 QCB1 – Light is equipped with location pin
Series	Supplied with washer and M12x25 bolt.
M290 M390 M290x390	F & U compatible version available Weight = 0.17 kg (0.37 lbs)

CON47	Female fitting for Multicube QCO1, RCO1, QCP1, RCT1
Series	Supplied with washer and M16x40 bolt.
M400 M520 M950 M760	Weight = 0.50 kg (1.10 lbs)

CL50	Clip 50
Series	Banner attachment for ø=50 mm (2'') tubes. Colour: clear Not compatible with 48 mm (1.89") tubes. Weight = 0.03 kg (0.07 lbs)
M290B M290E M390K M290x390	

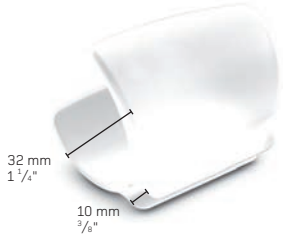

CL32	Clip 32
Series	Banner attachment for ø=32 mm (0.63'') tubes. Colour: clear Weight = 0.02 kg (0.04 lbs)
M222	

CON18	Parcel DUO (2xCCM, 4xPM, 4xSRPM)
Series	Connection set for DUO truss Weight = 0.20 kg (0.44 lbs)
M222	

CON19	Parcel trio (3xCCM, 6xPM, 6xSRPM)
Series	Connection set for TRIO truss Weight = 0.30 kg (0.66 lbs)
M222	

CON20	Parcel quatro (4xCCM, 8xPM, 8xSRPM)
Series	Connection set for QUATRO truss Weight = 0.40 kg (0.88 lbs)
M222	

CON16	Parcel duo (2xCCB, 4xPB, 4xSRPB)
Series	Connection set for DUO truss CON29 - DUO F CON34 - DUO U Weight = 0.49 kg (1.08 lbs)
M290 M390	

CON12	Parcel trio (3xCCB, 6xPB, 6xSRPB)
Series	Connection set for TRIO truss CON30 - TRIO F CON35 - TRIO U Weight = 0.73 kg (1.61 lbs)
M290 M390	

CON17	Parcel quatro (4xCCB, 8xPB, 8xSRPB)
Series	Connection set for QUATRO truss CON31 - QUATRO F CON36 - QUATRO U Weight = 0.73 kg (1.61 lbs)
M290 M390 M290x390	

CON60	Parcel duo for electro truss
Series	1x CC B, 2x PB, 2x SRP B, M10x45 bolt / washer / nut Weight = 0.30 kg (0.66 lbs)
M290E	

CON61	Parcel trio for electro truss
Series	2x CC B, 4x PB, 4x SRP B, M12x70 bolt / washer / nut Weight = 0.52 kg (1.15 lbs)
M290E	

CON42	Parcel quatro (4xCCO, 8xPO, 8xSRPO)
Series	4x CC O, 8x PO, 8x SRP O Connection set for QUATRO truss Weight 2.16 kg (4.76 lbs)
M400	
M520	
M760	
M950	

PGS	Pin GS
Series	Weight = 0.10 kg (0.22 lbs)
4GS-35	
4GS-35	
4GS-62	
4GS-62F	

PGSF	Pin GS Folding
Series	Weight = 0.20 kg (0.44 lbs)
4GS-62F	

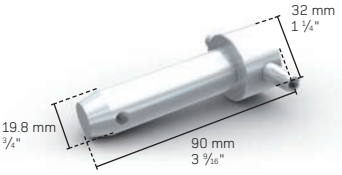

PGX	Pin GX
Series	Weight = 0.29 kg (0.64 lbs)
4GX-91	

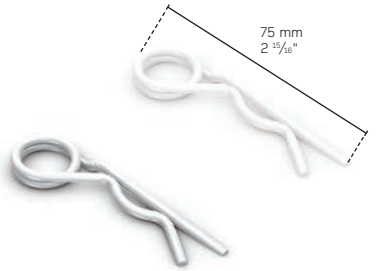

SRPO	Safety R Clip O
Series	Weight = 0.003 kg (0.01 lbs)
4GS-35	
4GS-50	
4GS-62	
4GS-62F	
4GX-91	

CON119	Parcel
Series	Weight = 0.42 kg (0.93 lbs)
4GS-35	
4GS-50	
4GS-62	
4GS-62F	

CON133	Parcel 4GS-62F (2xPGS, 3x SRP O, 1xPGSF)
Series	Weight = 0.42 kg (0.93 lbs)
4GS-62F	

CON139	Parcel 4GX-91 (4xPGX, 4xSRP O)
Series	Parcel 4xPinGX, 4xSRPO Weight = 1.15 kg (2.54 lbs)
4GX-91	

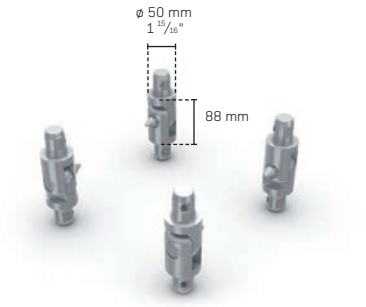

MT1-07B	Hinge parts MT1
Series	4 off hinges supplied per set F & U compatible versions available
M290 M390	

TRU-SLE-M290	Stretching fabric for M290 Quatro Truss textile sleeve for M290 quatro
Series	Available in white and black Black or white, B1 flame retardant textile Available lengths 1.5m; 2m; 2.5m or 25m roll Weight = 5.5 kg / 25m (12.13 lbs/82 ft)
M290	

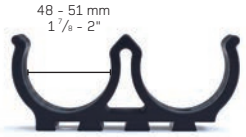

TRA-CLI-2XD50	Plastic casting for stacking truss Truss transport clip
Series	Fits 48-51mm tubes. Weight = 0.08 kg (0.18 lbs)
M290 M390	

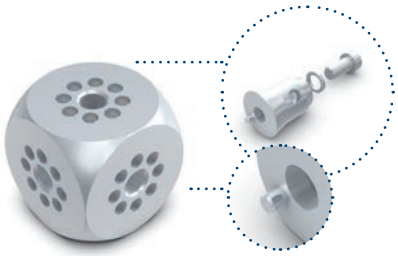

CUBEB-UNI	Universal multiconnection cube with 360°setting adjustability
Series	Weight 0.27 kg (0.60 lbs)
M100 M290 M390 M290x390	

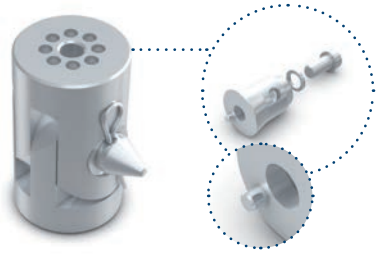

HINGEQB-UNI	Universal hinge
Series	Weight 0.27 kg (0.60 lbs)
M100 M290 M390 M290x390	

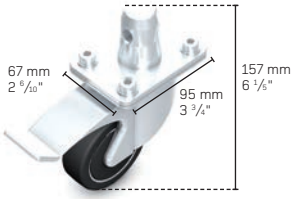

BBPSC-GW	Transport wheel with brake and half coupler
Series	F & U compatible versions available Weight = 2.00 kg (4.41 lbs)
M100 M290 M390 M290x390	

MODULAR HINGE	Universal connection
Series	Hinge solution for DUO, TRIO, QUATRO in one. Weight 0.49 kg (1.08 lbs)
M100 M290 M390 M290x390	

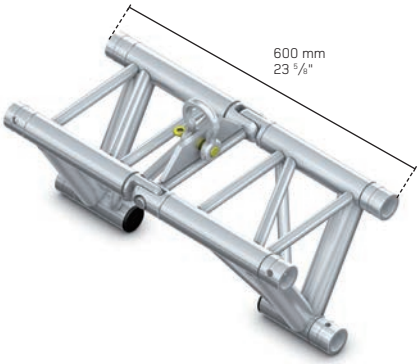

HP-STP-FLEX	Flexible Hinge Section for TRIO Truss
Series	WLL 1000kg (2204.2 lbs) DGUV17 / BGVC1 Max. angle upwards 76.8° Max. angle downwards 115.5° Weight 7.2 kg (15.87 lbs)
M290 M390	

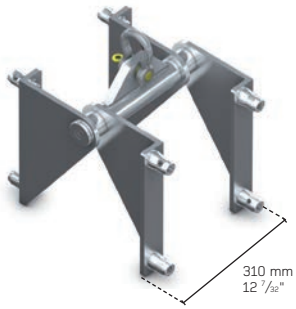

HP-QTB-FLEX	Flexible Hinge Section for QUATRO Truss
Series	WLL 1000kg (2204.2 lbs) DGUV17 / BGVC1 Max. angle upwards 124° Max. angle downwards 28° Weight 9.7 kg (21.37 lbs)
M290 M390	

Holding on firmly

Cell clamps

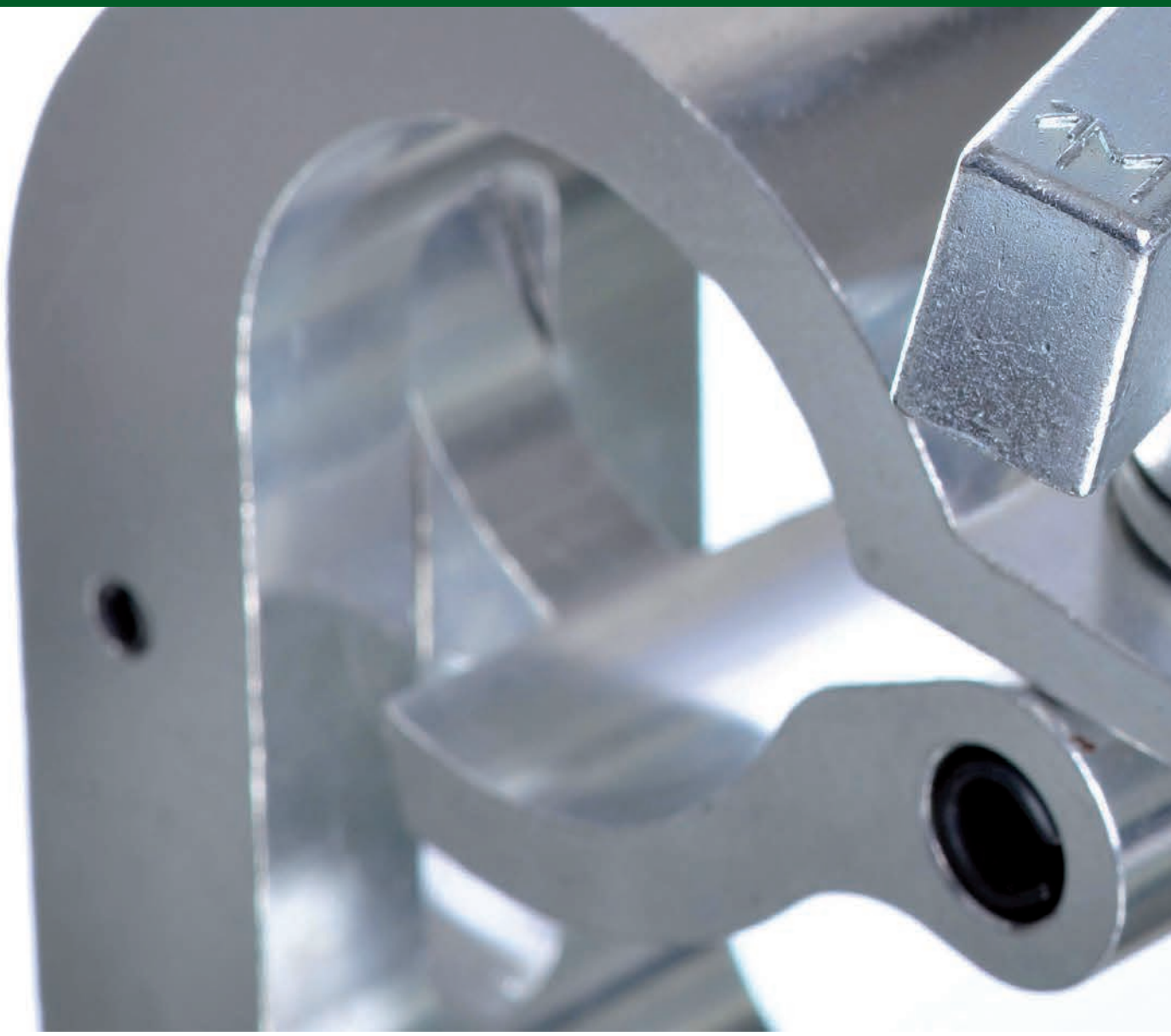

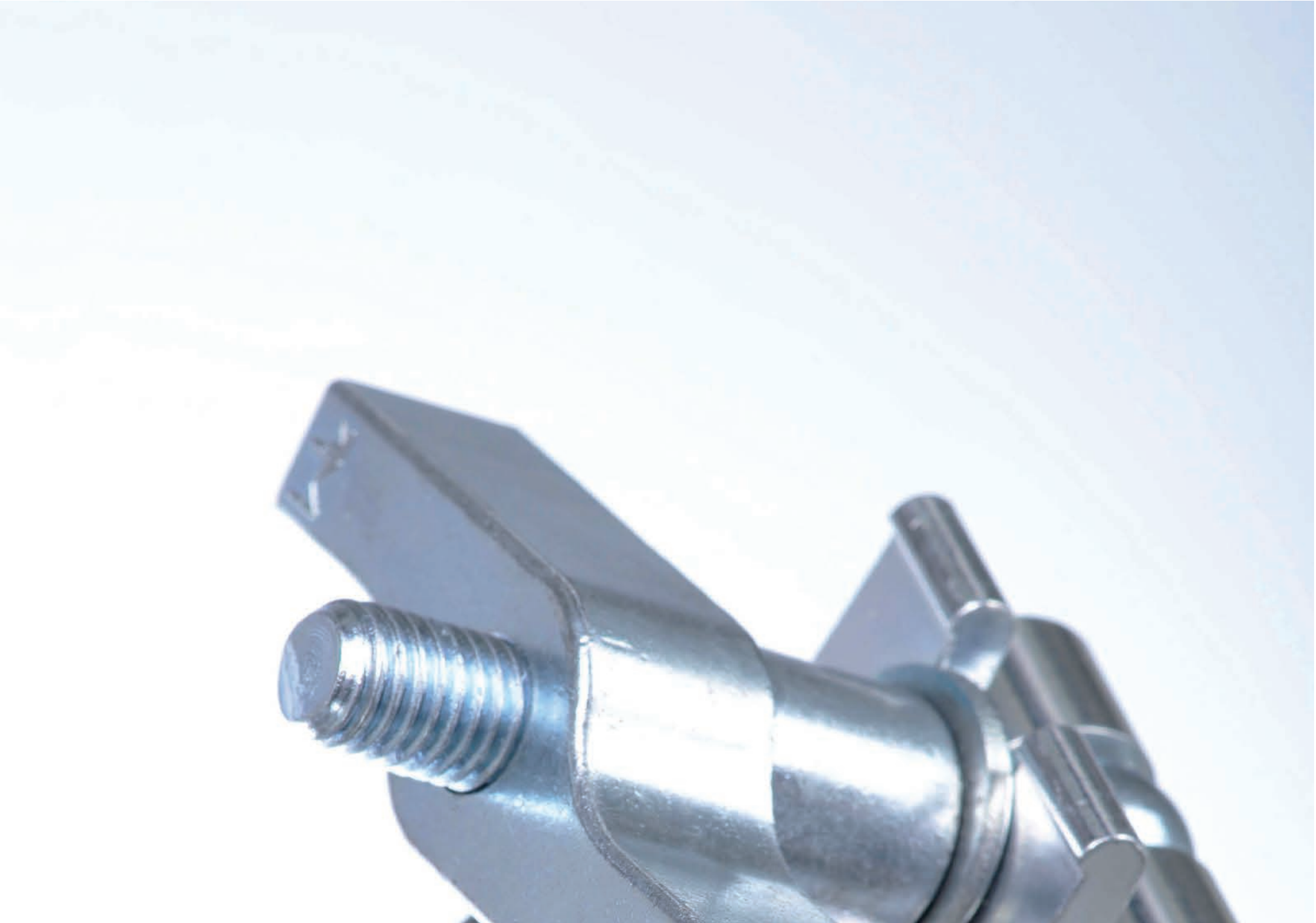

Holding on firmly
CELL 100

- Designed for 32mm (1 1/4") diameter tubes
- Precision extruded high tensile aluminium alloy
- DGUV17/BGV C1 rating
- Compatible with M222 series
- Supplied with M6 bolt & wingnut
- Mounting hole suitable for up to 6.5 mm (¼") bolts
- Polished surface with micro-percussion markings
- Powder coated versions available on request
- Rated with SF 8:1 (kg) DGUV17/BGV C1 (SWL_1)
- Rated with SF 4:1 (kg) 2006/42/EC (SWL_2)

CELL101				Basic clamp
SWL_1	SWL_2	Weight	Tube Ø	Basic Clamp can be used for most applications.
190 kg	380 kg	0.15 kg	32 mm	
419 lbs	838 lbs	0.33 lbs	1.26"	

CELL102				Clamp with bolt and wingnut
SWL_1	SWL_2	Weight	Tube Ø	Clamp supplied with M6 x 25 bolt and wingnut.
190 kg	380 kg	0.25 kg	32 mm	
419 lbs	838 lbs	0.55 lbs	1.26"	

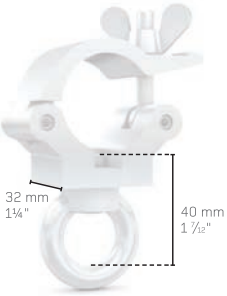

CELL103				Clamp with lifting eye
SWL_1	SWL_2	Weight	Tube Ø	Clamp supplied with steel eye for rope or cable attachment.
190 kg	380 kg	0.70 kg	32 mm	
419 lbs	838 lbs	1.54 lbs	1.26"	

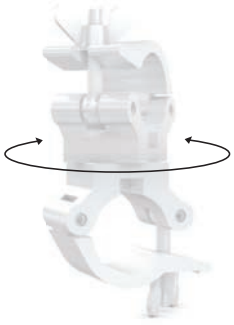

CELL104				Swivel coupler
SWL_1	SWL_2	Weight	Tube Ø	Set of two clamps free to rotate 360° for connection of two tubes.
190 kg	380 kg	0.80 kg	32 mm	
419 lbs	838 lbs	1.76 lbs	1.26"	

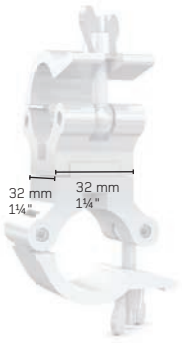

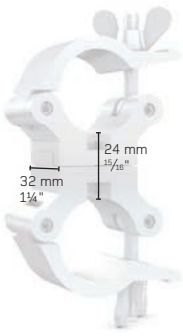

CELL105				90° fixed coupler
SWL_1	SWL_2	Weight	Tube Ø	Set of two clamps fixed at 90° to each other for connection of two tubes.
190 kg	380 kg	0.80 kg	32 mm	
419 lbs	838 lbs	1.76 lbs	1.26"	

CELL106				Parallel coupler
SWL_1	SWL_2	Weight	Tube Ø	Set of two clamps fixed parallel to each other for connection of two tubes.
190 kg	380 kg	0.80 kg	32 mm	
419 lbs	838 lbs	1.76 lbs	1.26"	

CELL113				Horizontal attachment
L1	L2	L3	Tube Ø	32 x 1.5 mm also available in custom lengths.
250 mm	500 mm	750 mm	32 mm	
9.84"	19.69"	29.53"	1.26"	

Holding on firmly
CELL 200

- Designed for 48-51mm (1 7/8"-2") diameter tubes
- Precision extruded high tensile aluminium alloy
- DGUV17/BGV C1 rating
- Compatible with M290 / M390 / M400 / M520 / M760 / 4GS-35 / 4GS-50 / 4GS-62
- Supplied with M12 bolt & wingnut
- Mounting hole for up to 13mm (1/2") bolts
- Polished surface with micro-percussion markings
- Powder coated versions available on request
- Rated with SF 8:1 (kg) DGUV17/BGV C1 (SWL_1)
- Rated with SF 4:1 (kg) 2006/42/EC (SWL_2)

CELL201				Basic clamp
SWL_1	SWL_2	Weight	Tube Ø	Basic Clamp can be used for most applications.
650 kg	1300 kg	0.50 kg	48-51 mm	
1433 lbs	2865 lbs	1.10 lbs	1.89"-2"	

CELL202				Clamp with bolt and wingnut
SWL_1	SWL_2	Weight	Tube Ø	Clamp supplied with M12 x 35 bolt and wingnut.
650 kg	1300 kg	0.59 kg	48-51 mm	
1433 lbs	2865 lbs	1.30 lbs	1.89"-2"	

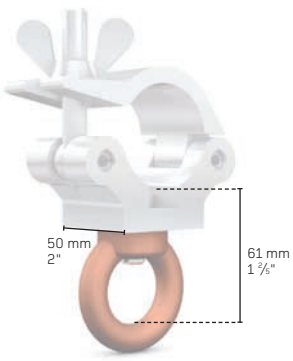

CELL203				Clamp with lifting eye
SWL_1	SWL_2	Weight	Tube Ø	Clamp supplied with steel eye for attachment of rope or cable. Version with SWL 340 kg (750 lbs) silver lifting eye available
650 kg	1300 kg	0.65 kg	48-51 mm	
1433 lbs	2865 lbs	1.43 lbs	1.89"-2"	

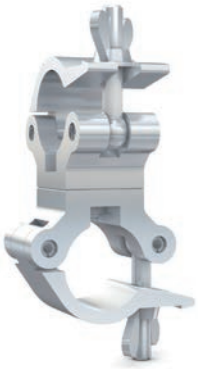

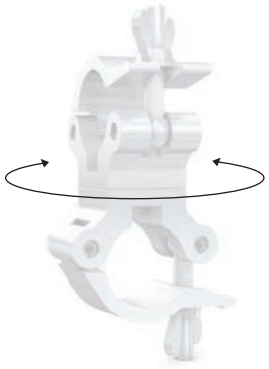

CELL204				Swivel coupler
SWL_1	SWL_2	Weight	Tube Ø	Set of two clamps free to rotate 360° for connection of two tubes.
540 kg	1080 kg	1.00 kg	48-51 mm	
1190 lbs	2381 lbs	2.20 lbs	1.89"-2"	

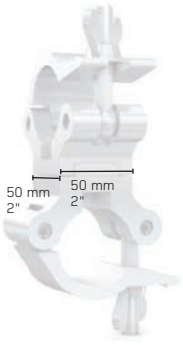

CELL205				90° fixed coupler
SWL_1	SWL_2	Weight	Tube Ø	Set of two clamps fixed at 90° to each other for connection of two tubes.
540 kg	1080 kg	1.00 kg	48-51 mm	
1190 lbs	2381 lbs	2.20 lbs	1.89"-2"	

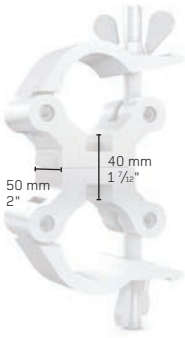

CELL206				Parallel coupler
SWL_1	SWL_2	Weight	Tube Ø	Set of two clamps fixed parallel to each other for connection of two tubes.
540 kg	1080 kg	1.00 kg	48-51 mm	
1190 lbs	2381 lbs	2.20 lbs	1.89"-2"	

CELL207				Slim basic clamp
SWL_1	SWL_2	Weight	Tube Ø	Slim basic clamp can be used for most applications.
560 kg	1120 kg	0.30 kg	48-51 mm	
1234 lbs	2469 lbs	0.66 lbs	1.89"-2"	

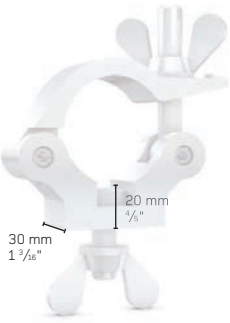

CELL208				Slim clamp with bolt and nut
SWL_1	SWL_2	Weight	Tube Ø	Slim clamp supplied with M12 x 50 bolt and wingnut.
560 kg	1120 kg	0.39 kg	48-51 mm	
1234 lbs	2469 lbs	0.86 lbs	1.89"-2"	

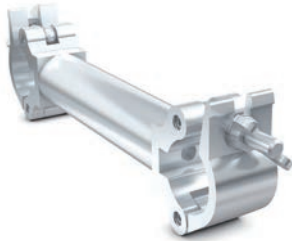

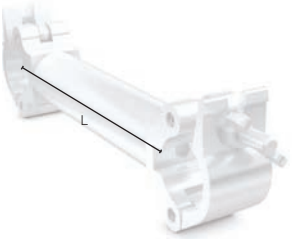

CELL209				Extended parallel coupler
L1	L2	L3	Tube Ø	Set of two clamps connected with aluminium tube in various lengths for parallel tube connections. Custom lengths available.
250 mm	500 mm	1000 mm	48-51 mm	
9.84"	19.69"	39.37"	1.89"-2"	

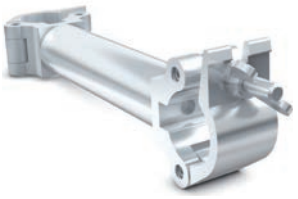

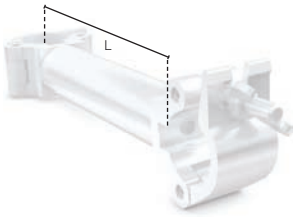

CELL210				Extended 90° fixed coupler
L1	L2	L3	Tube Ø	Set of two clamps connected with aluminium tube in various lengths for 90° tube connections. Custom lengths available.
250 mm	500 mm	1000 mm	48-51 mm	
9.84"	19.69"	39.37"	1.89"-2"	

CELL211				Side clamp
SWL_1	SWL_2	Weight	Tube Ø	Side clamp is ideal for using with trusses. Substitute for claw clamp.
780 kg	1560 kg	0.55 kg	48-51 mm	
1719 lbs	3439 lbs	1.21 lbs	1.89"-2"	

CELL212				Slim side clamp
SWL_1	SWL_2	Weight	Tube Ø	Side clamp is ideal for using with trusses. Substitute for claw clamp.
410 kg	820 kg	0.35 kg	48-51 mm	
904 lbs	1807 lbs	0.77 lbs	1.89"-2"	

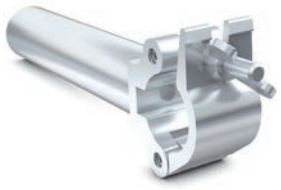

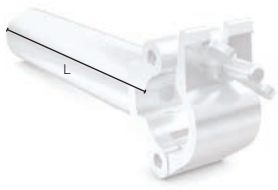

CELL213				Horizontal attachment
L1	L2	L3	Tube Ø	50 x 2 mm Also available in custom lengths
250 mm	500 mm	750 mm	48-51 mm	
9.84"	19.69"	29.53"	1.89"-2"	

Holding on firmly
CELL 300

- Designed for 60-63.5mm (2 3/8"-2 1/2") diameter tubes
- Precision extruded high tensile aluminium alloy
- DGUV17/BGV C1 rating
- Compatible with M950 / 4GS-91
- Supplied with M12 bolt & wingnut
- Mounting hole for up to 13mm (1/2") bolts
- Polished surface with micro-percussion markings
- Powder coated versions available on request
- Rated with SF 8:1 (kg) DGUV17/BGV C1 (SWL_1)
- Rated with SF 4:1 (kg) 2006/42/EC (SWL_2)

CELL301				Basic clamp
SWL_1	SWL_2	Weight	Tube Ø	Basic Clamp can be used for most applications.
650 kg	1300 kg	0.65 kg	60-63.5 mm	
1433 lbs	2865 lbs	1.43 lbs	2.36"-2.5"	

CELL302				Clamp with bolt and wingnut
SWL_1	SWL_2	Weight	Tube Ø	Clamp supplied with M12 x 35 bolt and wingnut.
650 kg	1300 kg	0.75 kg	60-63.5 mm	
1433 lbs	2865 lbs	1.65 lbs	2.36"-2.5"	

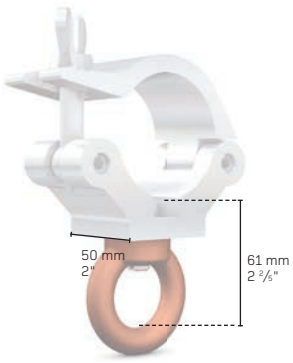

CELL303				Clamp with lifting eye
SWL_1	SWL_2	Weight	Tube Ø	Clamp supplied with steel eye for for attachment of rope or cable. Version with SWL 340 kg (750 lbs) silver lifting eye available
650 kg	1300 kg	1.00 kg	60-63.5 mm	
1433 lbs	2865 lbs	2.20 lbs	2.36"-2.5"	

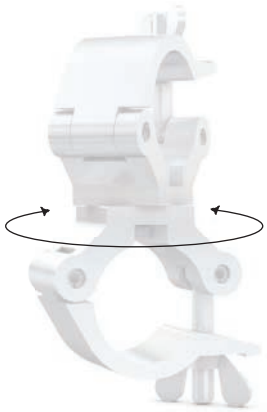

CELL304				Swivel coupler
SWL_1	SWL_2	Weight	Tube Ø	Set of two clamps free to rotate 360° for connection of two tubes.
650 kg	1300 kg	1.50 kg	60-63.5 mm	
1433 lbs	2865 lbs	3.30 lbs	2.36"-2.5"	

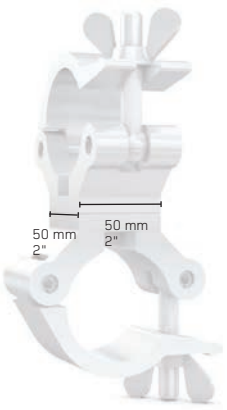

CELL305				90° fixed coupler
SWL_1	SWL_2	Weight	Tube Ø	Set of two clamps fixed at 90° to each other for connection of two tubes.
650 kg	1300 kg	1.50 kg	60-63.5 mm	
1433 lbs	2865 lbs	3.30 lbs	2.36"-2.5"	

CELL306				Parallel coupler
SWL_1	SWL_2	Weight	Tube Ø	Set of two clamps fixed parallel to each other for connection of two tubes.
650 kg	1300 kg	1.50 kg	60-63.5 mm	
1433 lbs	2865 lbs	3.30 lbs	2.36"-2.5"	

Holding on firmly
CELL 400

- Quick hook clamp series designed for 38-51mm (1 1/2"-2") diameter tubes
- Quick & easy attachment solution for moving heads
- Precision extruded high tensile aluminium alloy
- DGUV17/BGV C1 rating
- Supplied with M12 bolt & wingnut
- Compatible with M290 / M390 / M400 / M520 / M760 / 4GS-35 / 4GS-50 / 4GS-62
- Mounting hole for up to 13mm (1/2") bolts
- Polished surface with micro-percussion markings
- Powder coated versions available on request
- Rated with SF 8:1 (kg) DGUV17/BGV C1 (SWL_1)
- Rated with SF 4:1 (kg) 2006/42/EC (SWL_2)

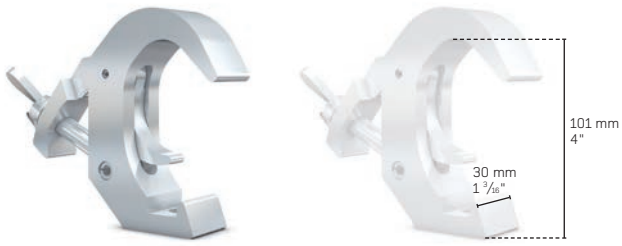

CELL401				Quick clamp
SWL_1	SWL_2	Weight	Tube Ø	Quick clamp can be used for welding or construction of special items.
360 kg	720 kg	0.68 kg	38-51 mm	
794 lbs	1587 lbs	1.50 lbs	1.5"-2"	

CELL411				Quick Clamp with Wing bolt
SWL_1	SWL_2	Weight	Tube Ø	Quick clamp can be used for welding or construction of special items. Suitable for tubes up to 60 mm (2.36")
190 kg	380 kg	0.68 kg	38-60 mm	
419 lbs	838 lbs	1.50 lbs	1.5"-2.36"	

CELL402				Quick clamp with bolt and wingnut
SWL_1	SWL_2	Weight	Tube Ø	Quick clamp supplied with M12 x 35 bolt and wingnut.
360 kg	720 kg	0.75 kg	38-51 mm	
794 lbs	1587 lbs	1.65 lbs	1.5"-2"	

CELL403				Quick clamp with lifting eye
SWL_1	SWL_2	Weight	Tube Ø	Quick clamp supplied with steel eye for attachment of ropes or cables.
360 kg	720 kg	0.75 kg	38-51 mm	
794 lbs	1587 lbs	1.65 lbs	1.5"-2"	

Holding on firmly
CELL 500

- Low profile series designed for 48-51mm (1 7/8"-2") diameter tubes
- Ideal for exhibitions, displays & light duty applications
- Precision extruded ultra-high tensile aluminium alloy
- DGUV17/BGV C1 rating
- Supplied with M6 bolt & wingnut
- Compatible with M290 / M390 / M400 / M520 / M760 / 4GS-35 / 4GS-50 / 4GS-62
- Mounting hole for up to 10.5mm (5/12") bolts
- Polished surface with micro-percussion markings
- Powder coated versions available on request
- Rated with SF 8:1 (kg) DGUV17/BGV C1 (SWL_1)
- Rated with SF 4:1 (kg) 2006/42/EC (SWL_2)

CELL501				Basic clamp
SWL_1	SWL_2	Weight	Tube Ø	Basic clamp can be used for lightweight applications.
230 kg	460 kg	0.14 kg	48-51 mm	
507 lbs	1014 lbs	0.30 lbs	1.89"-2"	

CELL502				Clamp with bolt and wingnut
SWL_1	SWL_2	Weight	Tube Ø	Clamp supplied with M10 x 30 bolt and wingnut.
230 kg	460 kg	0.22 kg	48-51 mm	
507 lbs	1014 lbs	0.47 lbs	1.89"-2"	

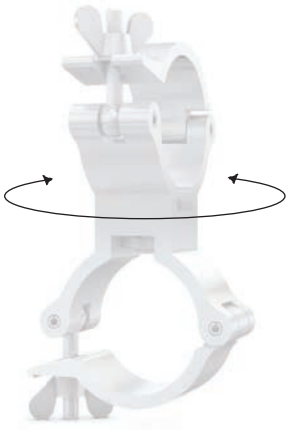

CELL504				Swivel coupler
SWL_1	SWL_2	Weight	Tube Ø	Set of two clamps free to rotate 360° for connection of two tubes.
230 kg	460 kg	0.27 kg	48-51 mm	
507 lbs	1014 lbs	0.60 lbs	1.89"-2"	

CELL511			Panel holder
SWL	Weight	Tube Ø	Panel thickness range 5-10 mm (0.19"-0.39")
55 kg	0.22 kg	48-51 mm	
121 lbs	0.47 lbs	1.89"-2"	

Holding on firmly
CELL 600

- Hook clamp series designed for 48-51mm (1 7/8"-2") diameter tubes
- Quick & easy attachment solution for moving heads & heavy fixtures
- Precision extruded high tensile aluminium alloy
- DGUV17/BGV C1 rating
- Supplied with M12 bolt & wingnut
- Compatible with M290 / M390 / M400 / M520 / M760 / 4GS-35 / 4GS-50 / 4GS-62
- Mounting hole for up to 13mm (1/2") bolts
- Polished surface with micro-percussion markings
- Powder coated versions available on request
- Rated with SF 8:1 (kg) DGUV17/BGV C1 (SWL_1)
- Rated with SF 4:1 (kg) 2006/42/EC (SWL_2)

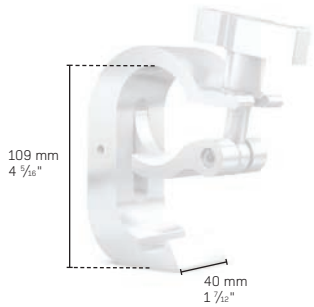

CELL601				Basic clamp
SWL_1	SWL_2	Weight	Tube Ø	Basic clamp can be used for most applications.
350 kg	700 kg	0.50 kg	48-51 mm	
771 lbs	1543 lbs	1.10 lbs	1.89"-2"	

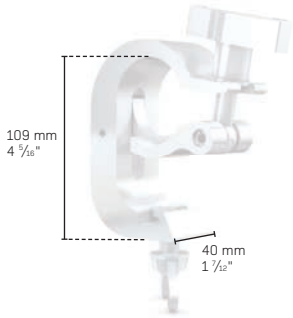

CELL602				Basic clamp with bolt and wingnut
SWL_1	SWL_2	Weight	Tube Ø	Clamp supplied with M12 x 35 bolt and wingnut.
350 kg	700 kg	0.58 kg	48-51 mm	
771 lbs	1543 lbs	1.28 lbs	1.89"-2"	

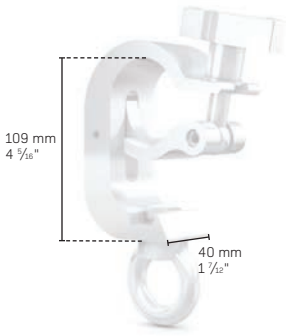

CELL603				Clamp with lifting eye
SWL_1	SWL_2	Weight	Tube Ø	Clamp supplied with steel eye for attachment of ropes or cables.
350 kg	700 kg	0.75 kg	48-51 mm	
771 lbs	1543 lbs	1.65 lbs	1.89"-2"	

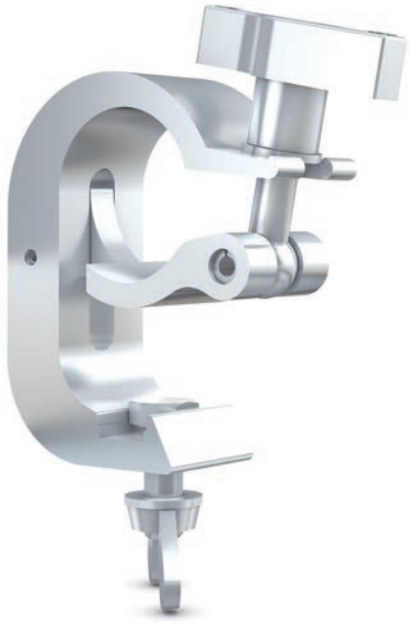

Raise your loads

Towers & LED screen structures

Raise your loads

MT05 tower

- Compact M290 series tower system - 6.2 m (20.34 ft)
- Sleeve block designed for use with M290 trusses
- Long outriggers (incl. stabilising braces) integrated into tower base
- Operated with hand winch or electric hoist

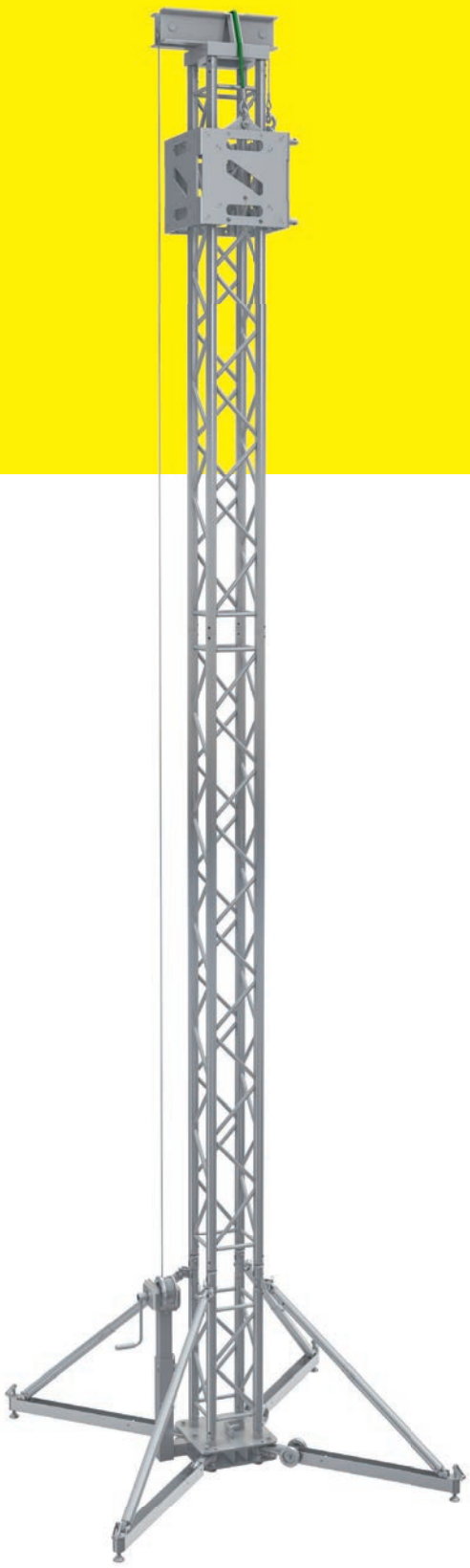

Height m [ft]	6.2	20.34
Self weight kg [lbs]	125	276

COMPONENTS REQUIRED TO CONSTRUCT 6.2M TOWER		
MT05-01	Base set with outriggers	1 piece
MT05-02	Head section	1 piece
MT05-03	Sleeve block (2way + 3 lifting eyes)	1 piece
MT05-06	Handwinch set	1 piece
MT05-07	Hinges (4pieces)	1 set
MT05-10	Safety wire set	1 piece
STRAIGHT M290 TRUSS (50x2mm main tubes • 16x2mm braces)		
QTB700	0.7m length	1 piece
QTB2500	2.5m length	1 piece
QTB3000	3m length	1 piece

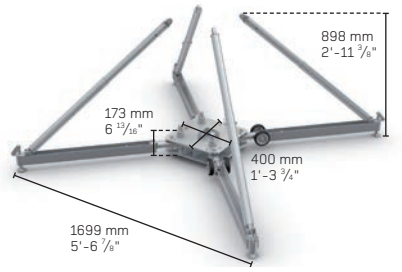

MT05-01	Aluminium base
Weight	Fitted with long, foldable out-riggers
35.00 kg	
77.15 lbs	

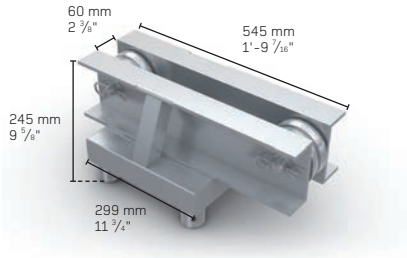

MT05-02	Head section for chain
Weight	Fitted with steel pulleys for 7 - 8mm (0.28 - 0.31´´) chain
13.00 kg	
28.65 lbs	

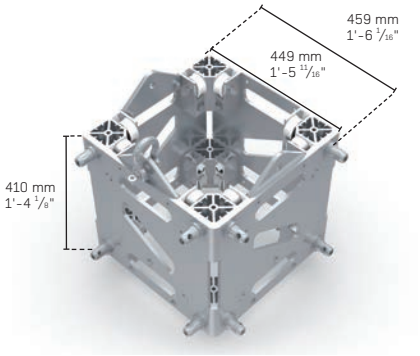

MT05-03	Sleeve block
Weight	Used with MT05 towers, suitable for M290 Quatro trusses.
33.00 kg	
72.74 lbs	

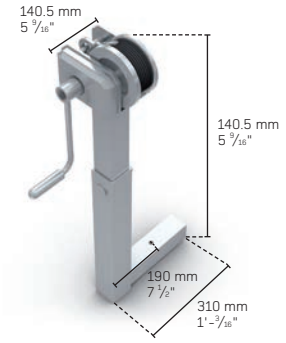

MT05-06	Hand winch
Weight	Alko hand winch is quipped with an aluminium square leg, which fits into the tower base
10.00 kg	
22.04 lbs	

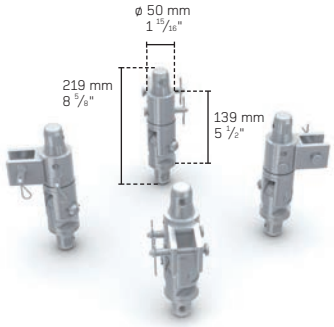

MT05-07	Hinges
Weight	Used to connect the vertical tower pieces and to allow for tilt-up assembly; set of 4pcs
4.20 kg	
9.26 lbs	

MT05-10	Safety wire
Weight	Used over MT05 mast top to secure sleeve block; protected with clear pvc
3.00 kg	
6.61 lbs	

Raise your loads
MT1 tower

- Compact, heavy-duty M290 series tower system - 7.5m (24.60 ft) max height
- For use independently or within MR1T and MR2 roof systems
- Sleeve block designed for use with M290 & M390 trusses
- Operate with manual chain block or electric chain hoist (bracket required)
- Reinforced head section with built-in feature for dead-hanging
- Guy wire connection points via bolt-on hangers
- Short or long outriggers (incl. stabilising brace) available
- Adjustable base feet with rubber pads for optimal friction

Height m [ft]	7.50	24.60
Self weight kg [lbs]	201	443

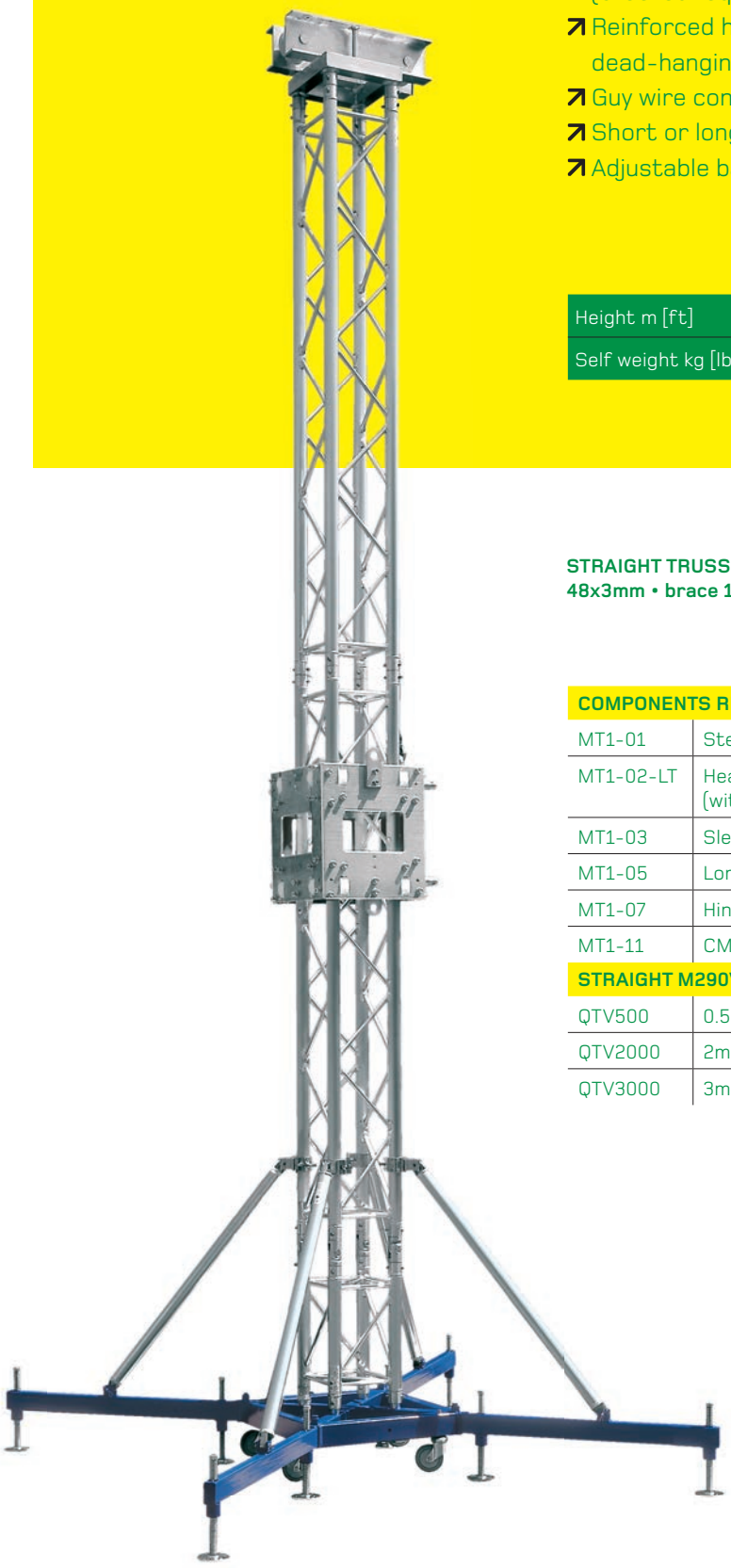

STRAIGHT TRUSS M290V (Main tube 48x3mm • brace 16x2mm)

COMPONENTS REQUIRED TO CONSTRUCT 7.5M TOWER		
MT1-01	Steel base	1 piece
MT1-02-LT	Head section only for hand chain block (with lifting eye)	1 piece
MT1-03	Sleeve block (2 way + 3 lifting eyes)	1 piece
MT1-05	Long outrigger (1 piece)	4 pieces
MT1-07	Hinges (4 pieces)	1 set
MT1-11	CM hand chain hoist 1t, 10m chains + bag	1 piece
STRAIGHT M290V TRUSS (48x3mm main tubes • 16x2mm braces)		
QTV500	0.5m length	1 piece
QTV2000	2m length	2 pieces
QTV3000	3m length	1 piece

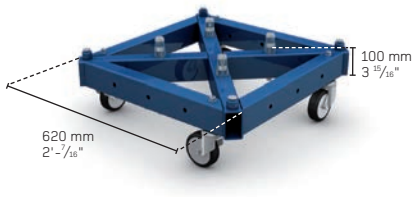

MT1-01	Steel base
Weight	Robust steel base gives stability to the tower. Equipped with wheels for easy positioning during setup.
33.00 kg	
72.66 lbs	

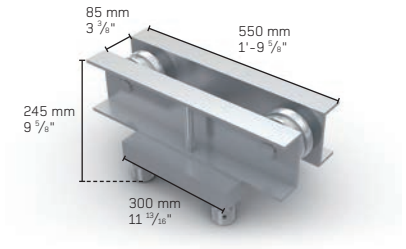

MT1-02 C	Head section for chain
Weight	Fitted with steel pulleys for 7 - 8mm (0.28 - 0.31´´) chain Alternative dimensions available after consultation
13.00 kg	
28.65 lbs	

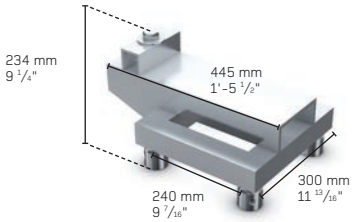

MT1-02LTG	Head section for steel wire
Weight	Fitted with dead hang hook
8.00 kg	
17.62 lbs	

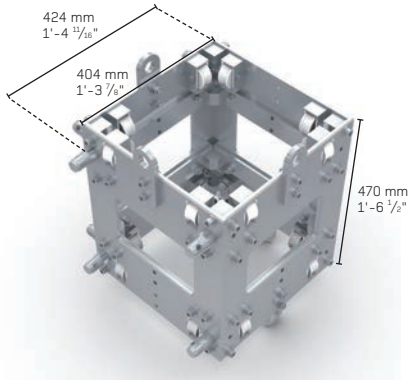

MT1-03	Sleeve block
Weight	Consists of 10mm (0.39´´) al. plates connected with steel components. Can be attached to M290 & 390 Quatro
46.00 kg	
101.29 lbs	

MT1-04	Short outrigger
Weight	Including adjustable spindles, rubber pads
5.00 kg	
11.02 lbs	

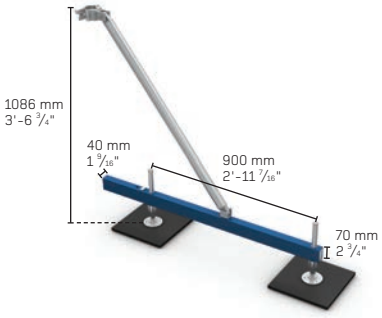

MT1-05	Long outrigger
Weight	1.2m (3.94´´) long, including adjustable spindles; rubber pads
16.00 kg	
35.23 lbs	

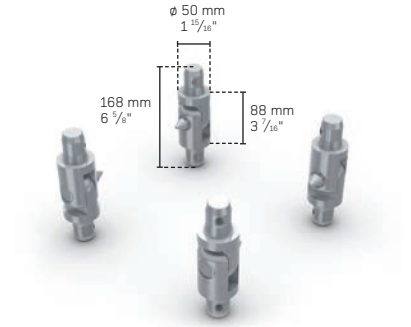

MT1-07	Hinges
Weight	Used to connect the vertical tower pieces and to allow for tilt-up assembly; set of 4pcs
2.40 kg	
5.28 lbs	

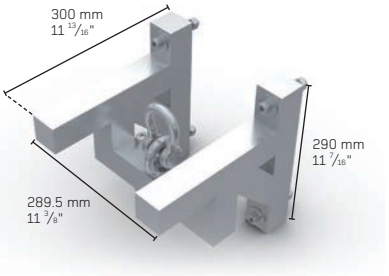

MT1-09	Bracket for chain hoist
Weight	Used for electric chain hoist attachment to sleeve block to achieve max. loading
6.00 kg	
13.21 lbs	

MT1-10	Safety wire
Weight	Used over MT1 mast top to secure the sleeve block; protected with clear pvc
3.00 kg	
6.61 lbs	

MT1-11	Manual hand chain hoist
Weight	Uses 10m chain, including chain bag, SWL 1t
25.00 kg	
55.05 lbs	

Raise your loads

MT2 tower

- Heavy-duty 390KT series tower system - 12.5 m (41.0 ft) max height
- Sleeve block options for M400 & M520 & M950 ranges
- Reinforced head section with built-in feature for dead-hanging
- Sleeve block chain hoist connection bracket available
- Guy wire connection points via extra bolt-on hangers
- Optional tower erecting frame available
- Short or long outriggers (incl. stabilising brace) available
- Adjustable base feet with rubber pads for optimal friction
- Scaffold type base feet available on request

Height m [ft]	12.5	41
Self weight kg [lbs]	352	776

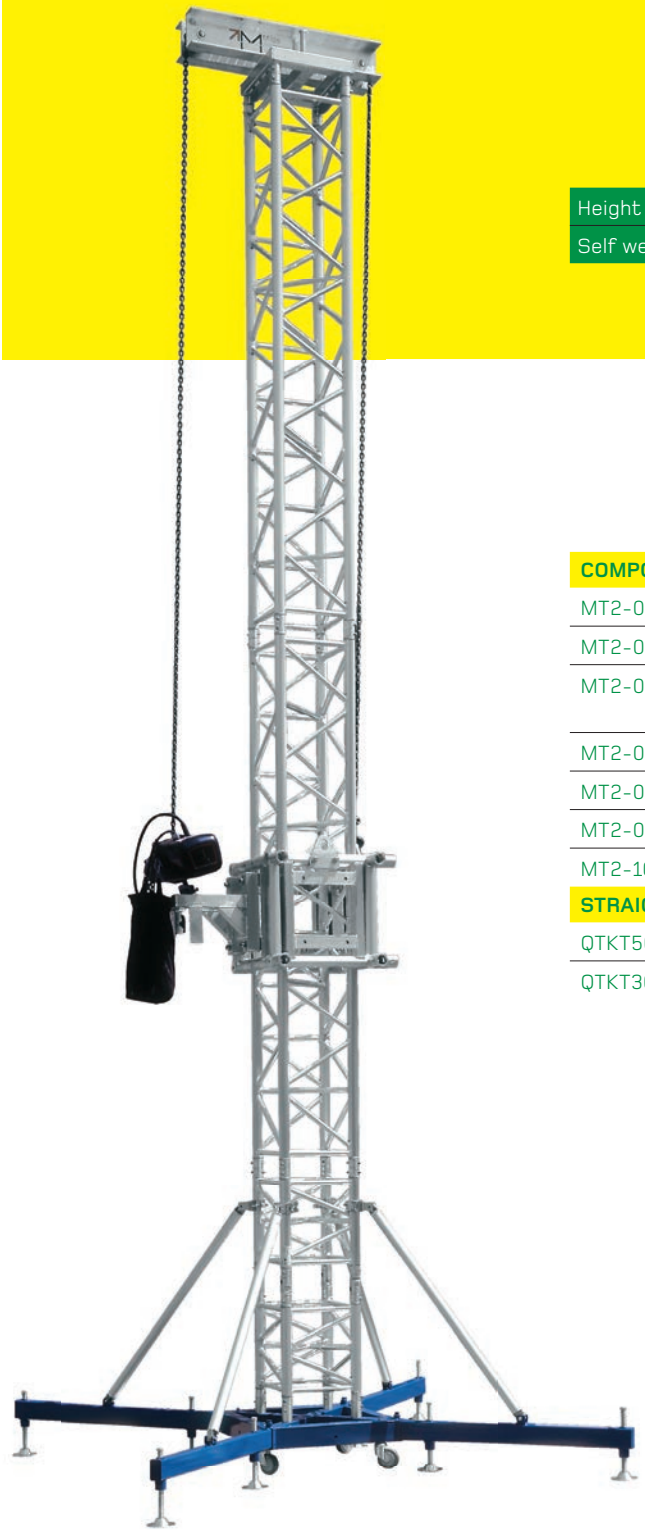

COMPONENTS REQUIRED TO CONSTRUCT 12.5M TOWER		
MT2-01	Steel base	1 piece
MT2-02	Head section for chain (with steel pulleys)	1 piece
MT2-03 QTP	Sleeve block M400rect / M520 quatro (2 way + 1 lifting eye)	1 piece
MT2-05	Long outrigger (1 piece)	4 pieces
MT2-07	Hinges (4 pieces)	1 set
MT2-09	Bracket for motor - on sleeve block	1 piece
MT2-10	Safety wire set	1 piece
STRAIGHT M390KT TRUSS (50x4mm main tubes • 25x3mm braces)		
QTKT500	0.5m length	1 piece
QTKT3000	3m length	4 pieces

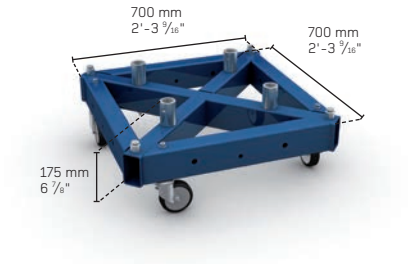

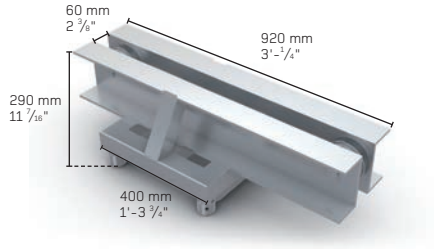

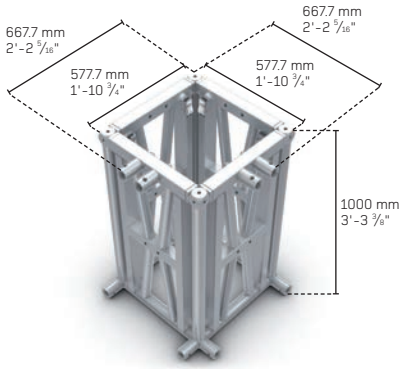

MT2-01	Steel base
Weight	For use with M390KT QUATRO Equipped with wheels for easy movement during setup.
42.00 kg	
92.48 lbs	

MT2-02	Head section
Weight	Fitted with steel pulleys for 7 - 8mm (0.28 - 0.31´´) chain Alternative dimensions available after consultation
25.00 kg	
55.05 lbs	

MT2-03FTT	Sleeve block FTT
Weight	Consists of strong aluminium profiles connected with steel components For use with M950 folding truss
80.00 kg	
176.37 lbs	

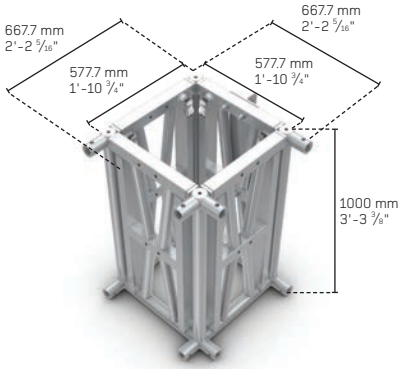

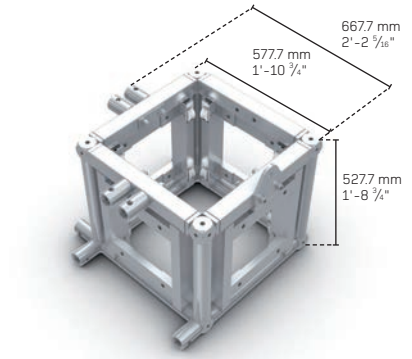

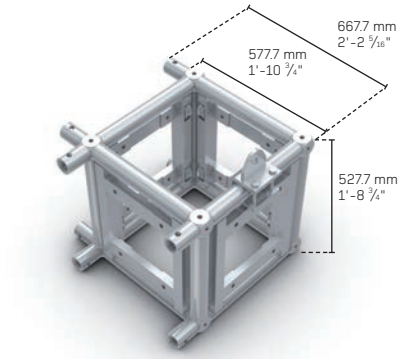

MT2-03RTT	Sleeve block RTT
Weight	Made with heavy-duty alumini- um profiles connected with steel components For use with rectangular M950
80.00 kg	
176.37 lbs	

MT2-03FTP	Sleeve Block FTP
Weight	Made with heavy-duty aluminium profiles connected with steel components For use with rectangular M400 & folding M520
49.00 kg	
107.90 lbs	

MT2-03QTP	Sleeve block QTP
Weight	Made with heavy-duty aluminium profiles connected with steel com- ponents For use with rectangular M400 & M520 QUATRO
49.00 kg	
107.90 lbs	

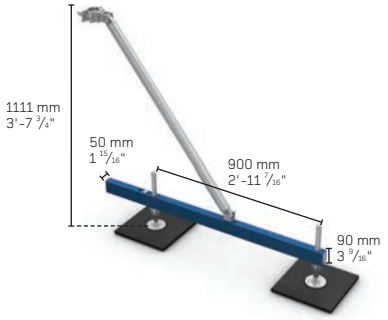

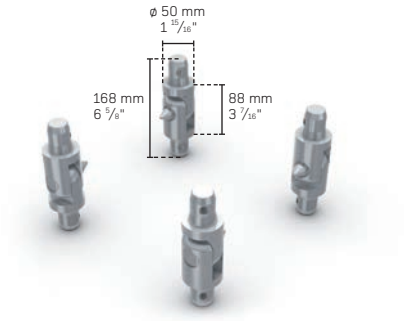

MT2-04	Short outrigger
Weight	Adjustable spindles; rubber pads
6.00 kg	
13.21 lbs	

MT2-05	Long outrigger
Weight	1.4m (4.59´) long, including adjustable spindles; rubber pads
21.00 kg	
46.24 lbs	

MT2-07	Hinges
Weight	Used to connect the vertical tower pieces and to allow for tilt-up assembly; set of 4pcs
2.40 kg	
5.25 lbs	

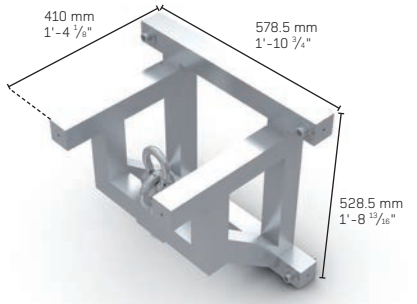

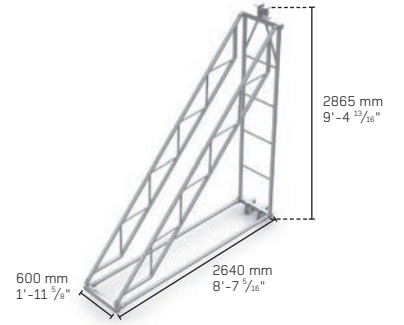

MT2-09	Bracket for chain hoist
Weight	Used for electric chain hoist attachment to sleeve block to achieve max. loading
16.00 kg	
35.26 kg	

MT2-10	Safety wire
Weight	Used over MT2 mast top to se- cure the sleeve block; protected with clear pvc
4.00 kg	
8.81 lbs	

MT2-11	Tower erecting frame
Weight	Used for assistance in elevating the tower
40.30 kg	
88.74 lbs	

Raise your loads
MT3 tower

- High-capacity M520T series tower system - 13.5m (44.29 ft) max height
- Sleeve block options for M400 & M520 & M950 ranges
- Reinforced head section with built-in feature for dead-hanging
- Sleeve block chain hoist connection bracket available
- Guy wire connection points via extra bolt-on hangers
- Optional tower erecting frame available
- Short or long outriggers (incl. stabilising braces) available
- Adjustable base feet with rubber pads for optimal friction
- Scaffold type base feet available on request

Height m [ft]	13.5	44.29
Self weight kg [lbs]	576	1269.6

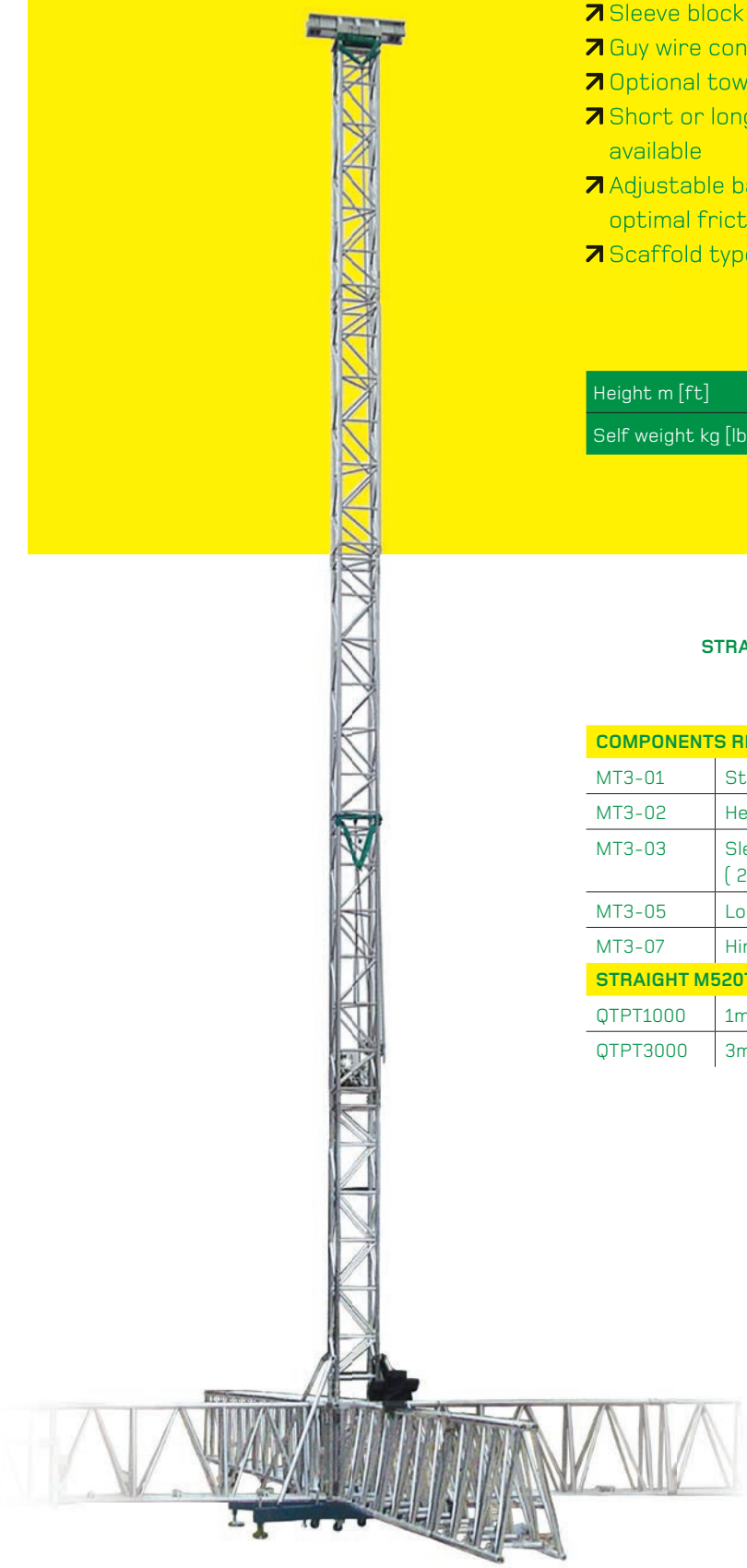

STRAIGHT TRUSS M520T (Main tube 60x6mm • brace 30x3mm)

COMPONENTS REQUIRED TO CONSTRUCT 13.5 m TOWER		
MT3-01	Steel base	1 piece
MT3-02	Head section-for double chain hoist	1 piece
MT3-03	Sleeve block M950rect / M950fold (2 way + 1 lifting eye)	1 piece
MT3-05	Long outrigger (1 piece)	4 pieces
MT3-07	Hinges (4 pieces)	1 set
STRAIGHT M520T TRUSS (60x6mm main tubes • 30x3mm braces)		
QTPT1000	1m length with MT3 ladder	1 piece
QTPT3000	3m length with MT3 ladder	4 pieces

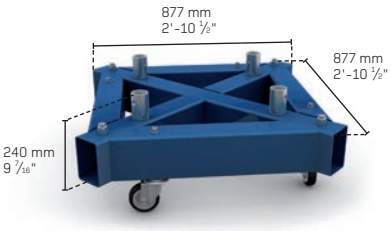

MT3–01	Steel base
Weight	For use with M520T QUATRO Equipped with wheels for easy movement during setup.
76.00 kg	
167.35 lbs	

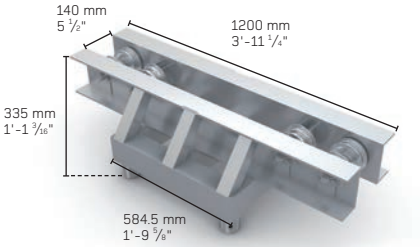

MT3–02	Head section
Weight	Fitted with steel pulleys for 7 - 8mm (0.28 - 0.31´´) chain Alternative dimensions available after consultation
49.40 kg	
108.78 lbs	

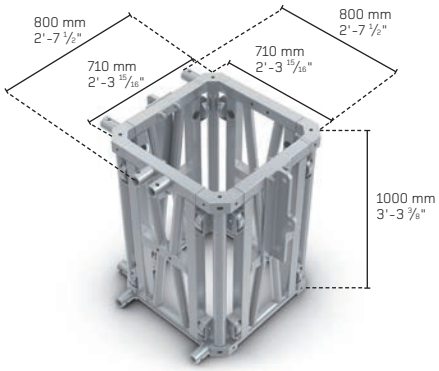

MT3–03	Sleeve Block FTT & RTT
Weight	Made with heavy-duty aluminium profiles connected with steel components For use with M950 full range
112.00 kg	
246.62 lbs	

MT3–05	Long outrigger
Weight	1.4m (4.59´) long, including scaffold type spindles
35.10 kg	
77.29 lbs	

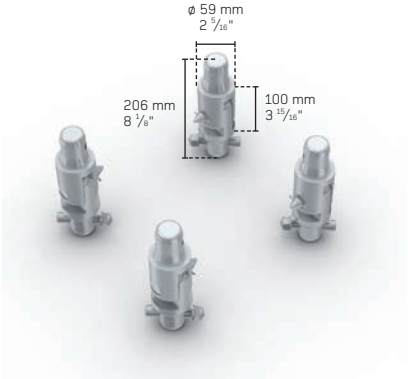

MT3–07	Hinges
Weight	Used to connect the vertical tower pieces and to allow for tilt-up assembly; set of 4pcs
5.00 kg	
11.02 lbs	

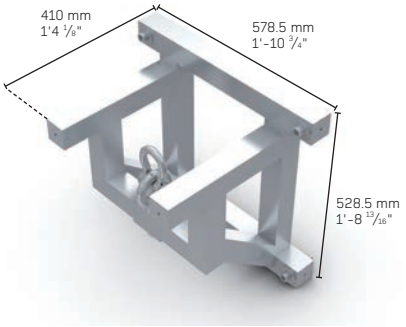

MT3–09	Bracket for chain hoist
Weight	Used for electric chain hoist attachment to sleeve block to achieve max. loading
10.90 kg	
24.00 lbs	

MT3–10	Safety chain
Weight	Used over MT3 mast top to se- cure the sleeve block; protected with clear pvc
10.00 kg	
22.20 lbs	

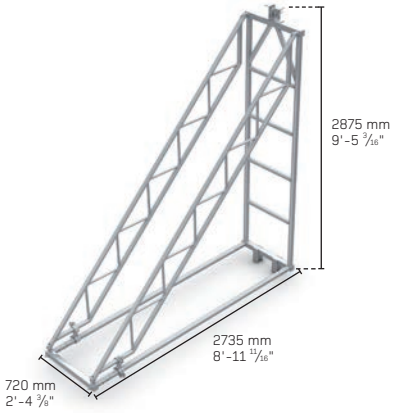

MT3–11	Tower erecting frame
Weight	Used for assistance in elevating the tower
81.00 kg	
178.52 lb	

Raise your loads
MRT1 tower

- Compact, heavy-duty M290 series Line Array tower solution
- 8m (26.25 ft) max. height - 750 Kg SWL
- Hinged mast & optimised components for fast assembly
- Optional tower erecting frame available
- Electric chain hoist or manual chain block connection point
- Screwjack feet for quick & easy levelling

Height m [ft]	8	26.25
Capacity with motor kg [lbs]	750	1653.47
Self weight kg [lbs]	178	392.40

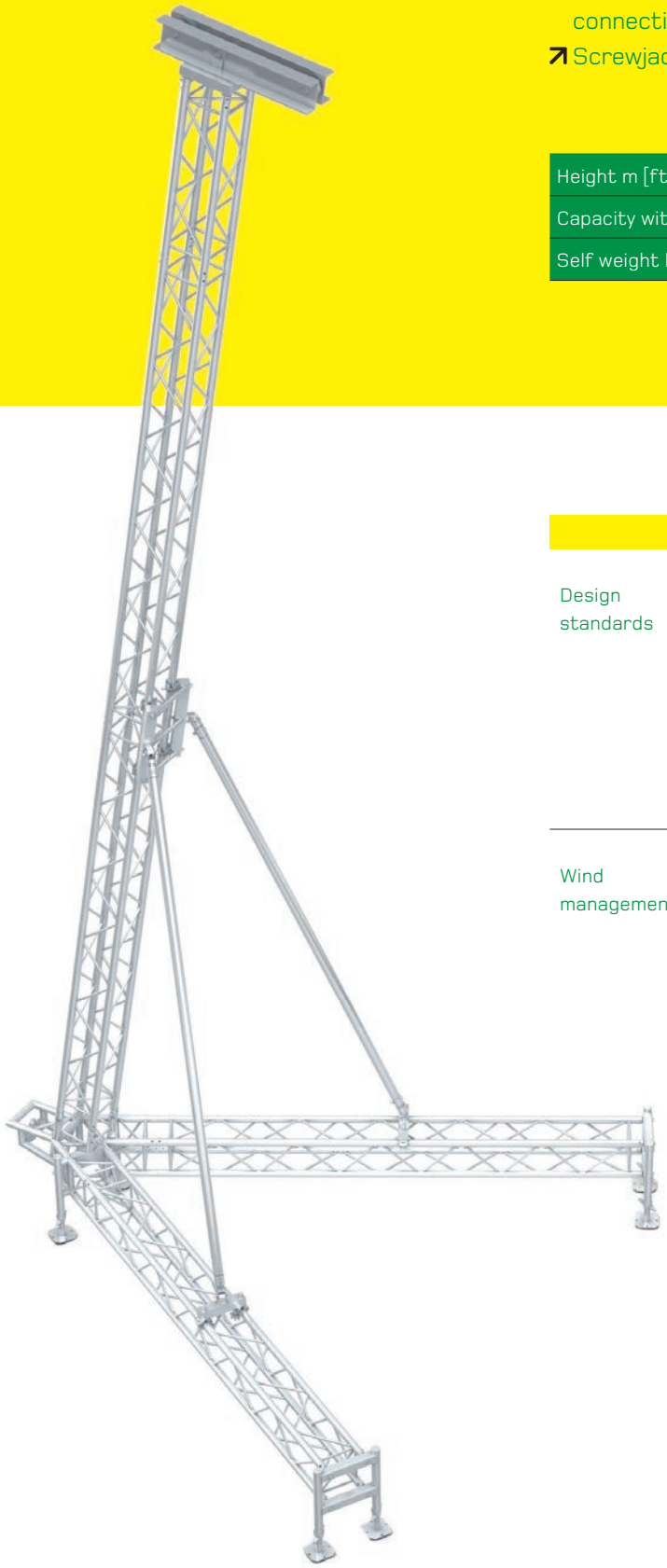

	OPERATIONAL SPECIFICATIONS
Design standards	DIN EN 13814 Fairground and amusement park machinery and structures
	DIN EN 1991 / Eurocode 1 Actions on structures
	DIN EN 1999 / Eurocode 9 Design of aluminium structures
	DIN EN 1993 / Eurocode 3 Design of steel structures
Wind management	In service 17.8m/s - 64km/h - 40mph (Max. gust wind speed)
	PA to be removed in above service wind speed
	Out of service 28.0m/s - 100km/h - 62mph (Max. gust wind speed)

COMPONENTS REQUIRED TO CONSTRUCT MRT1 TOWER			
1	MRT1-01	MRT1 QCV corner	1 piece
2	MRT1-02	MRT1 head section	1 piece
3	MRT1-03	MRT1 screwjack adapters	2 pieces
4	MRT1-04	MRT1 stabiliser attachment horizontal	2 piece
5	MRT1-05	MRT1 stabiliser attachment vertical	1 piece
6	MRT1-06	MRT1 stabiliser tube 60 x 6 mm	2 pieces
7	MRT1-07	MT1 07 hinge part (set of 4pcs)	1 piece
8	MRT1-08	40 cm screwjack	6 pieces
9	QTV1000	M290V quatro 1 m length	1 piece
10	QTV3000	M290V quatro 3 m length	4 pieces

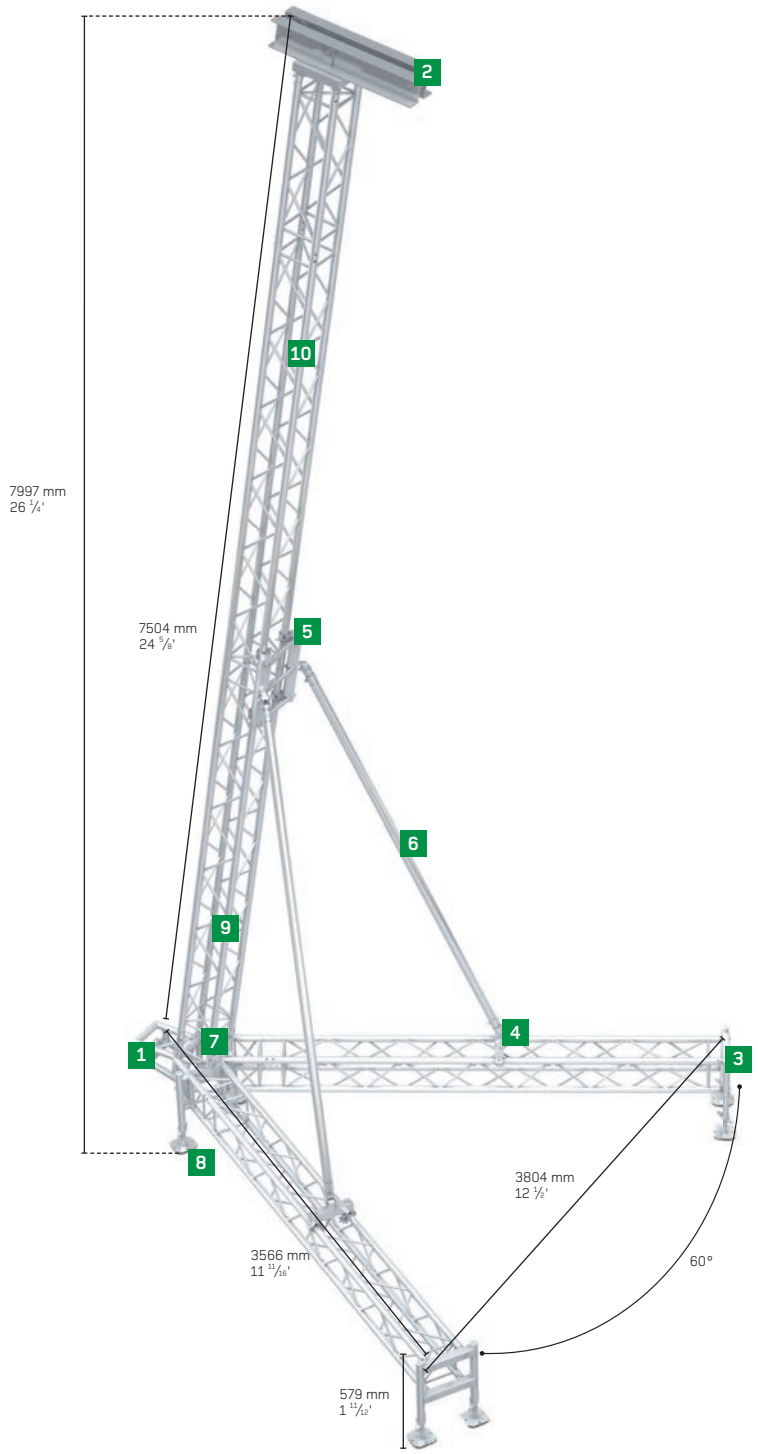

Raise your view

LSG0 LED screen structures

- Compact, self climbing LED tower with integrated ballast platform
- MT1 towers with central M390 bridge & M290 rear stabilising base frame
- Obstruction-free viewing for audience
- Operate with manual chain block or electric chain hoist
- Fast connection for quick, simple and secure assembly
- Full structural calculation report & build manual available
- Cantilever Line Array arms

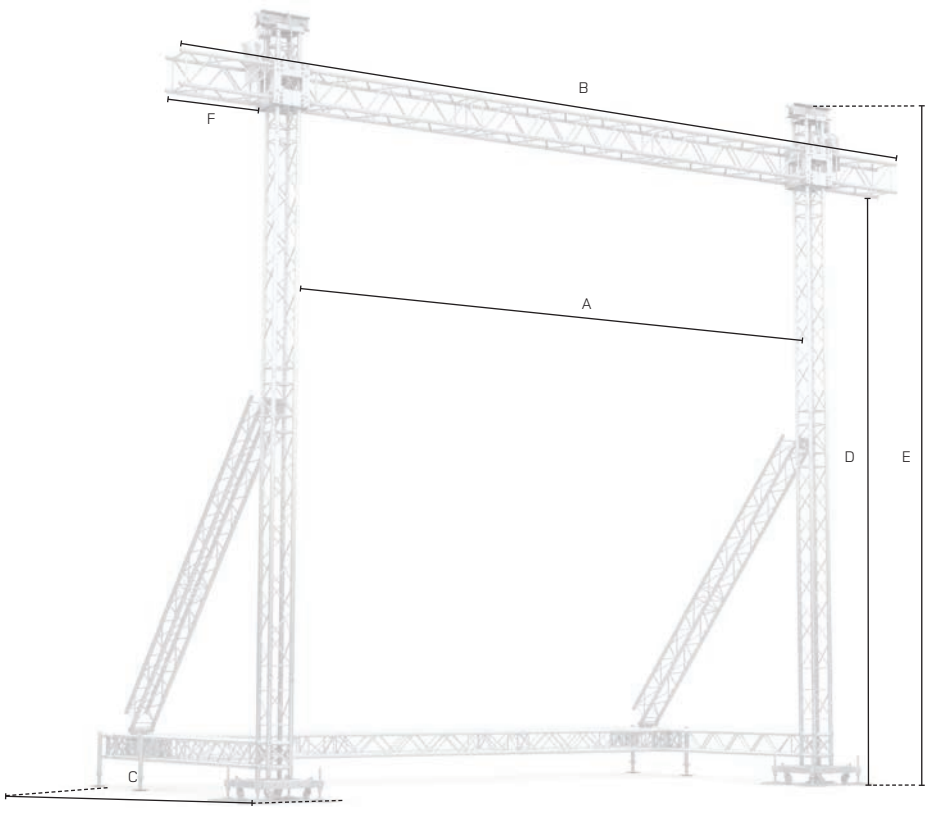

TECHNICAL SPECIFICATIONS

		LED screen size ›	6x4 m	19.70x13.10 ft
Dimensions	A	Internal width	6.65 m	21.82 ft
	B	Overall external width	9.39 m	30.81 ft
	C	Overall external depth	4.48 m	14.70 ft
	D	Clearance	7.08 m	23.23 ft
	E	Overall height	8.03 m	26.35 ft
	F	PA wing - internal width	1.07 m	3.51 ft

LOADING CAPACITY

		LED screen size ›	6x4 m	19.70x13.10 ft
Loading capacity	LED Screen	6x point loads equally divided	250 kg	551 lbs
		Max. total load	1500 kg	3306 lbs
	PA wing	Point load	250 kg	551 lbs
	* See structural report for exact load positioning			

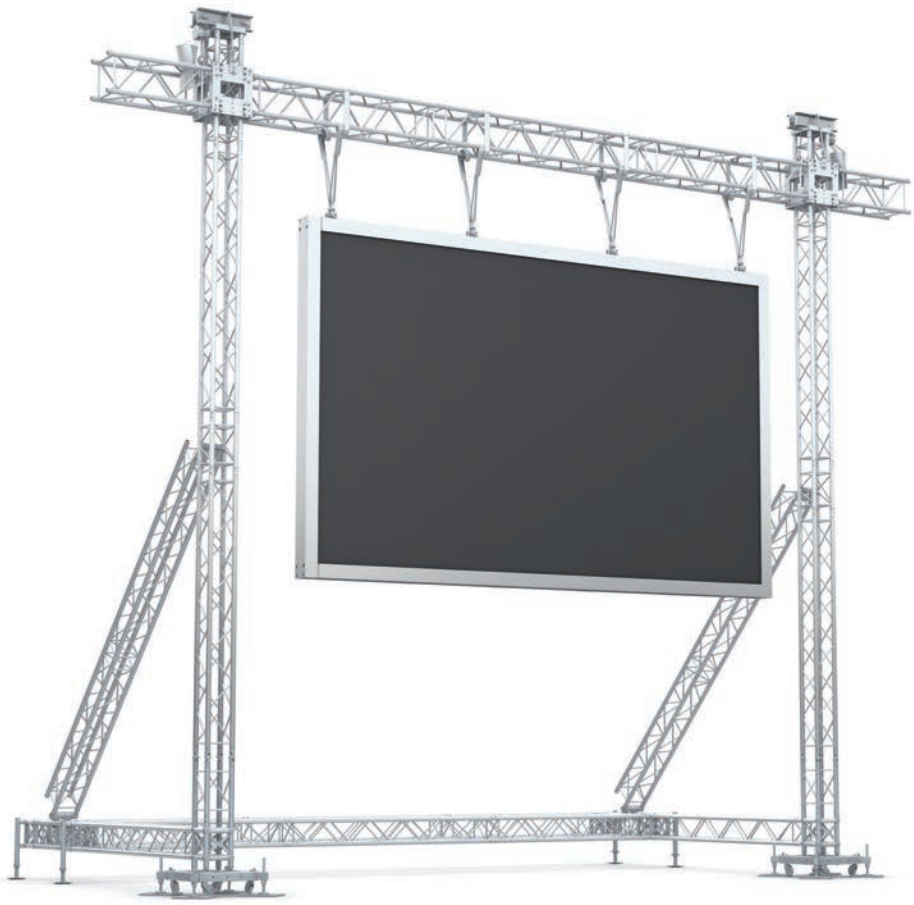

OPERATIONAL SPECIFICATIONS

Design standards	DIN EN 13814 (2012)	Fairground and amusement park machinery and structures
	DIN EN 1991 / Eurocode 1	Actions on structures
	DIN EN 1999 / Eurocode 9	Design of aluminium structures
	DIN EN 1993 / Eurocode 3	Design of steel structures
	• All of our structures are produced under EN 1090 EXC2 as standard and include the necessary guy wires, instruction manual and engineering report	
Wind management	In service	17.8m/s - 64km/h - 40mph (Max. gust wind speed)
	*Above in-service wind speed; PA to be removed and screen lowered to ground and supported at top by horizontal truss connected to towers at height with stabilizer tubes	
	Out of service	27.0m/s - 100km/h - 62mph (Max. gust wind speed)
Ballast	2x 900kg / 1982lbs placed at back side cross trusses, as close as possible to the sides If screen weight is lower than 1500kg / 3306lbs, 50% of the difference shall be placed on each front tower base	
Customized	Customisation, i.e. truss configuration, alternative dimensions, upon request Always verify your screen dimensions, weight and rigging with MILOS	

TRANSPORTATION DATA

	LED screen size ›	6x4 m	26.24x14.76 ft
Self-weight	* Exact self-weight depends on configuration	652 kg	1436 lbs
Transport volume	* Packed in carton boxes and bubble foil	8 m^3	282 ft^3

Raise your view
LSG1 LED screen structures

- MT Tower LED Screen Support solution
- Wide range of system options available to suit specific screen size & weight
- Self-climbing towers (MT1 / MT2 / MT3) with electric or manual hoists
- Fast connection for quick, simple and secure assembly
- Guy wire connection points for additional stabilisation
- Cheapest LSG concept available

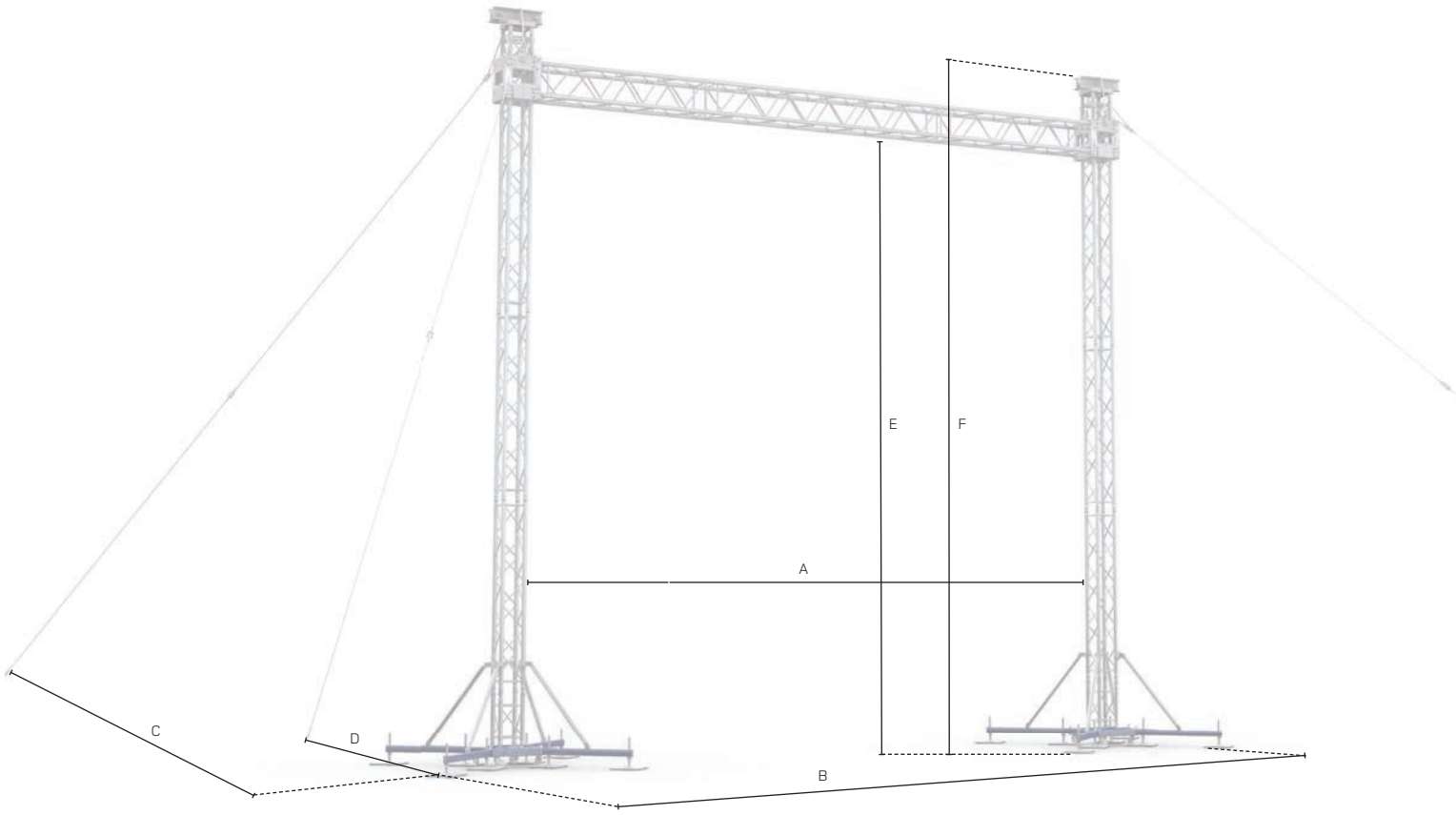

TECHNICAL SPECIFICATIONS

		LED screen size ›	8x4.5 m	26.24x14.76 ft	6.40x4.50 m	21.00x14.76 ft	6x4 m	19.70x13.10 ft
Dimensions	A	Internal width	9.32 m	30.57 ft	7.32 m	24.01 ft	7.15 m	23.45 ft
	B	External width	2.23 m	7.32 ft	2.23 m	7.32 ft	2.05 m	6.72 ft
	C	Width set-up area incl. guy wires	19.75 m	64.80 ft	15.25 m	50.04 ft	15.25 m	50.02 ft
	D	Depth set-up area incl. guy wires	16.10 m	52.82 ft	12.40 m	40.68 ft	12.40 m	40.67 ft
	E	Clearance	8.02 m	26.31 ft	6.54 m	21.46 ft	7.89 m	25.88 ft
	F	Overall height	9.67 m	31.72 ft	8.26 m	27.09 ft	8.04 m	26.37 ft

LOADING CAPACITY

		LED screen size ›	8x4.5 m	26.24x14.76 ft	6.40x4.50 m	21.00x14.76 ft	6x4 m	19.70x13.10 ft
Loading capacity	LED Screen	4x point loads equally divided	550 kg	1212 lbs	625 kg	1377 lbs	250 kg	551 lbs
		Max. total load	1700 kg	3747 lbs	2500 kg	5511 lbs	1000 kg	2205 lbs
	* See structural report for exact load positioning							

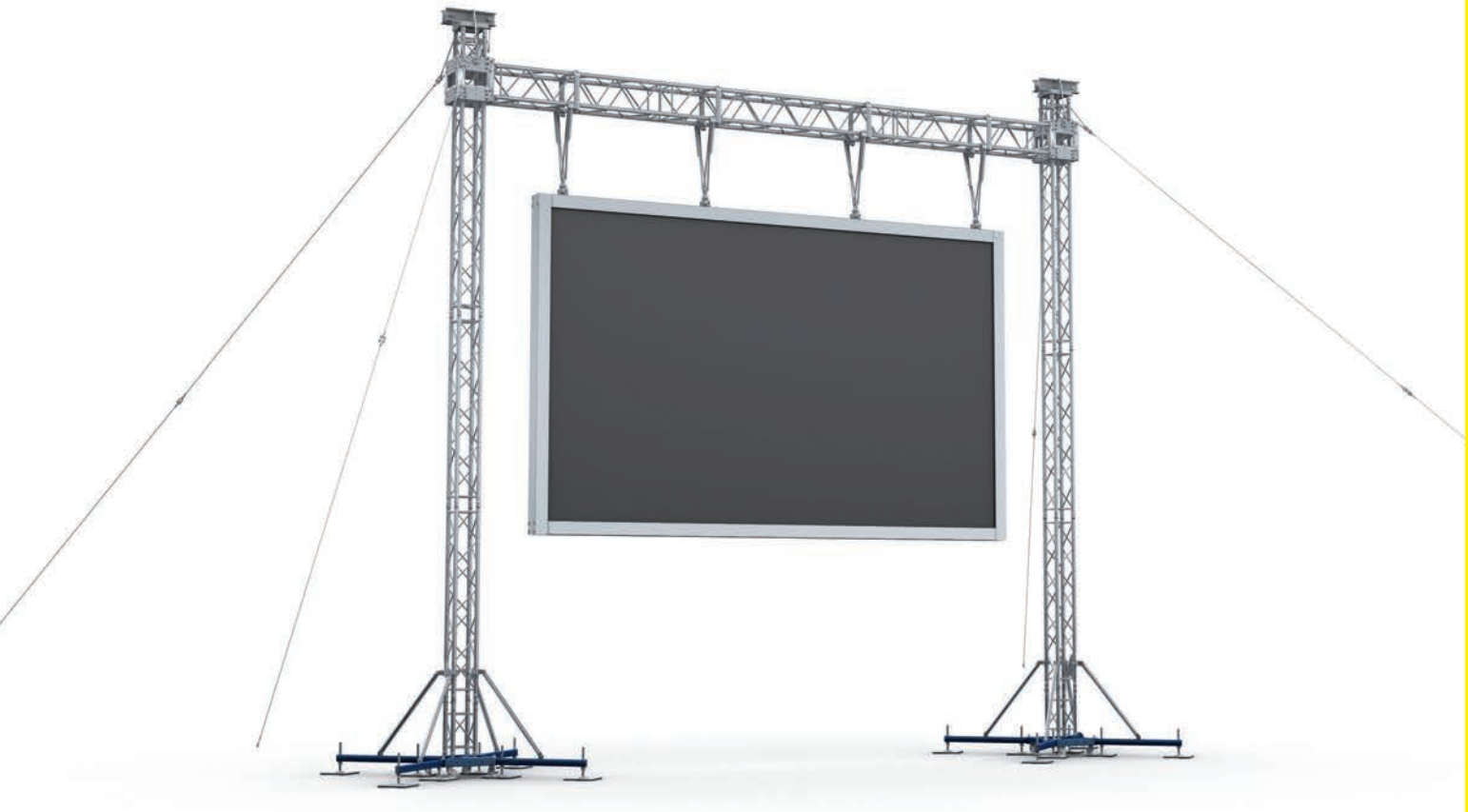

OPERATIONAL SPECIFICATIONS

Design standards	DIN EN 13814 (2005)	Fairground and amusement park machinery and structures
	DIN 1055-4	Actions on structures / wind
	DIN 4113	Design of aluminium structures
	DIN 18800	Design of steel structures
	• All of our structures are produced under EN 1090 EXC2 as standard and include the necessary guy wires, instruction manual and engineering report	
Wind management	Max. wind speed incl. screen	28m/s - 100km/h - 62mph (Max. basic wind speed)
	* Screen to be stabilised against swinging by cross truss at bottom of screen	
Ballast	4x 2160kg / 4757lbs at the end of each outrigger	
	* Figure based on screwjack to timber spreader to rubber to concrete / asphalt	
Customized	Customisation, i.e. truss configuration, alternative dimensions, upon request	
	Always verify your screen dimensions, weight and rigging with MILOS	

TRANSPORTATION DATA

	LED screen size ›	8x4.5 m	26.24x14.76 ft	6.40x4.50 m	21.00x14.76 ft	6x4 m	19.70x13.10 ft
Self-weight	* Exact self-weight depends on configuration	850 kg	1874 lbs	485 kg	1068 lbs	355.00 kg	783 lbs
Transport volume	* Packed in carton boxes and bubble foil	8 m^3	282 ft^3	6 m^3	212 ft^3	5 m^3	176 ft^3

Raise your view
LSG2 LED screen structures

- Free-standing MT Tower LED Screen Support solution
- Wide range of system options available to suit specific screen size & weight
- Self-climbing towers (MT1 / MT2 / MT3) with electric or manual hoists
- Screwjack feet for quick & easy levelling
- Fast connection for quick, simple and secure assembly
- Stabilisation via front & back integrated cross tension wires

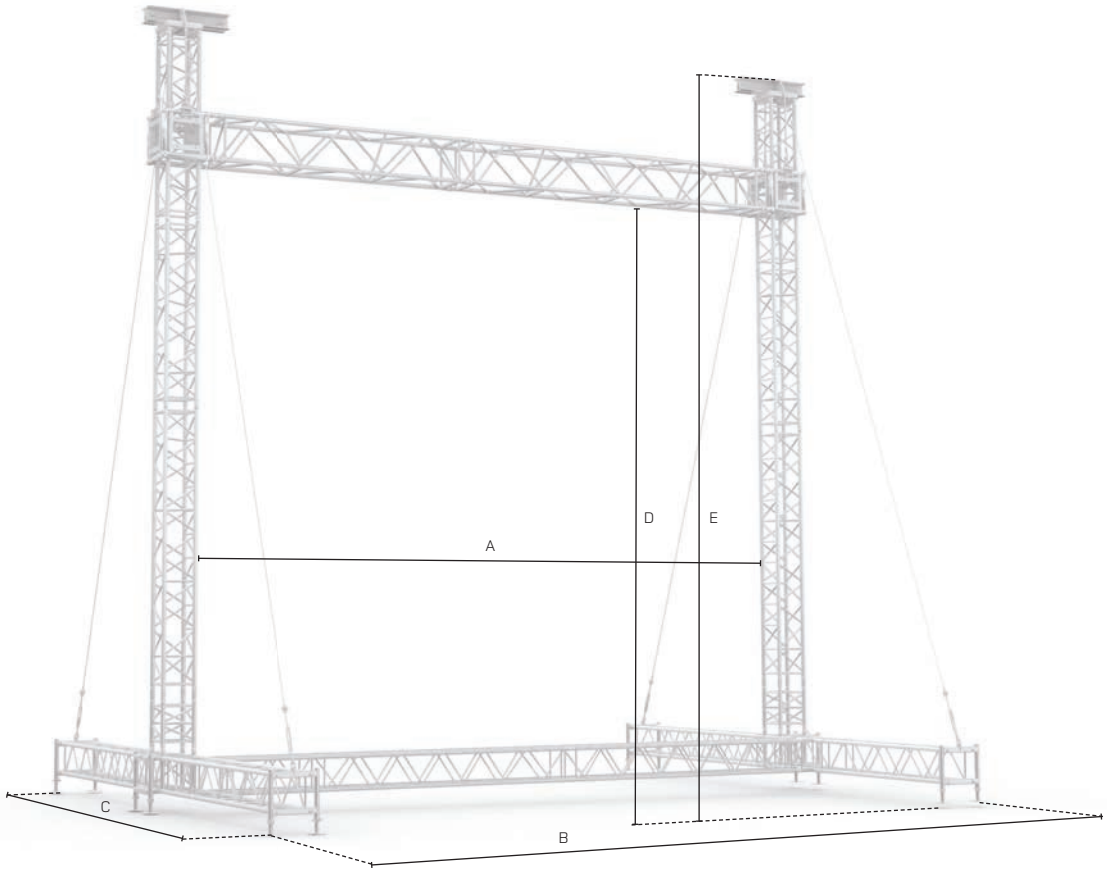

TECHNICAL SPECIFICATIONS

		LED screen size ›	6x4 m	19.70x13.10 ft
Dimensions	A	Internal width	7.36 m	24.15 ft
	B	Overall external width	8.50 m	27.89 ft
	C	Overall external depth	6.83 m	22.41 ft
	D	Clearance	6.86 m	22.51 ft
	E	Overall height	8.52 m	27.95 ft

LOADING CAPACITY

		LED screen size ›	6x4 m	19.70x13.10 ft
Loading capacity	LED Screen	6x point loads equally divided	416 kg	916 lbs
		3x point loads equally divided	833 kg	1835 lbs
		Max. total load	2500 kg	5511 lbs
	* See structural report for exact load positioning			

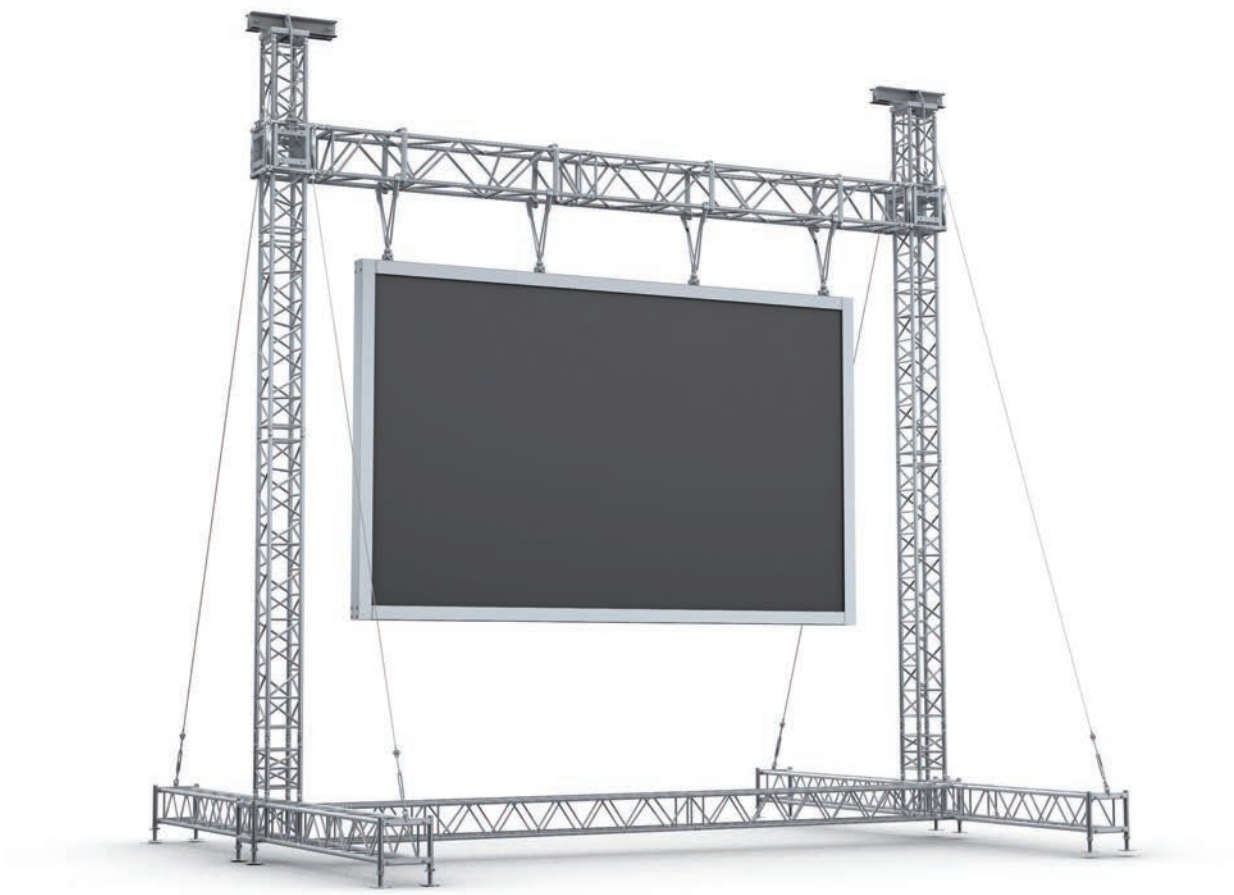

OPERATIONAL SPECIFICATIONS

Design standards	DIN EN 13814 (2005)	Fairground and amusement parks machinery and structures
	DIN 1055-4	Actions on structures / wind
	DIN 4113	Design of aluminium structures
	DIN 18800	Design of steel structures
	• All of our structures are produced under EN 1090 EXC2 as standard and include the necessary guy wires, instruction manual and engineering report	
Wind management	Max. wind speed incl. screen	28m/s - 100km/h - 62mph (Max basic wind speed)
	* Screen to be stabilised against swinging by cross truss at bottom of screen	
Ballast	4x 1700kg / 3744lbs at the end of each outrigger	
	Figure based on screwjack to timber spreader to rubber to concrete / asphalt	
Customized	Customisation, i.e. truss configuration, alternative dimensions, upon request	
	Always verify your screen dimensions, weight and rigging with MILOS	

TRANSPORTATION DATA

	LED screen size ›	6x4 m	19.70x13.10 ft
Self-weight	* Exact self-weight depends on configuration	750 kg	1652 lbs
Transport volume	* Packed in carton boxes and bubble foil	6.00 m^3	212 ft^3

Raise your view

LSG3 LED screen structures

- Large format MT Tower LED Screen Support solution
- Various system options available to suit specific screen size & weight
- Self-climbing towers (MT1 / MT2 / MT3) with electric or manual hoists
- Rear base frame & diagonal stabiliser to provide obstruction-free viewing

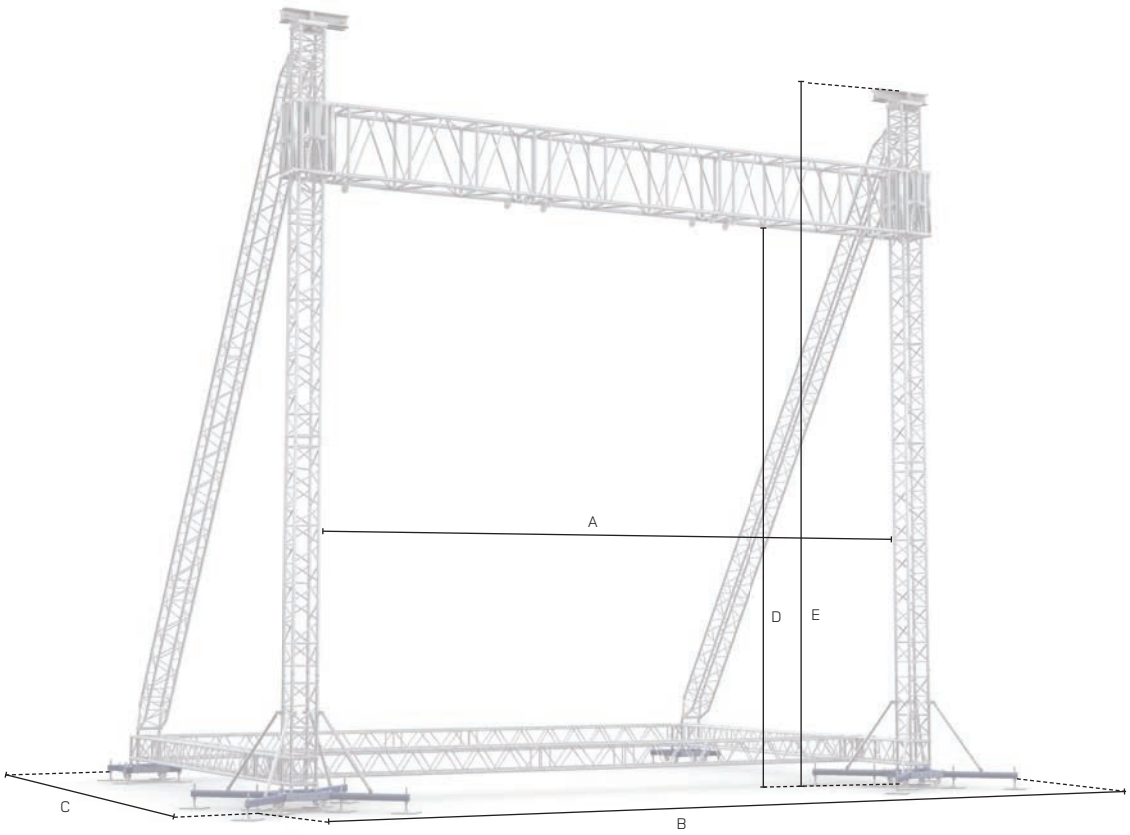

TECHNICAL SPECIFICATIONS

		LED screen size ›	10x6 m	32.80x19.70 ft	8x6 m	26.30x19.70 ft		
Dimensions	A	Internal width	11.36 m	37.26 ft	9.36 m	30.71 ft		
	B	Overall external width	13.99 m	45.89 ft	11.99 m	39.34 ft		
	C	Overall external depth	8.38 m	27.49 ft	8.38 m	27.49 ft		
	D	Clearance	8.50 m	27.88 ft	8.31 m	27.27 ft		
	E	Overall height	10.56 m	34.64 ft	10.56 m	34.65 ft		

LOADING CAPACITY

		LED screen size ›	10x6 m	32.80x19.70 ft	8x6 m	26.30x19.70 ft		
Loading capacity	LED Screen	8x point loads equally divided	400 kg	882 lbs	500 kg	1101 lbs		
		4x point loads equally divided	800 kg	1764 lbs	1000 kg	2203 lbs		
		Max. total load	3200 kg	7056 lbs	4000 kg	8811 lbs		
	* See structural report for exact load positioning							

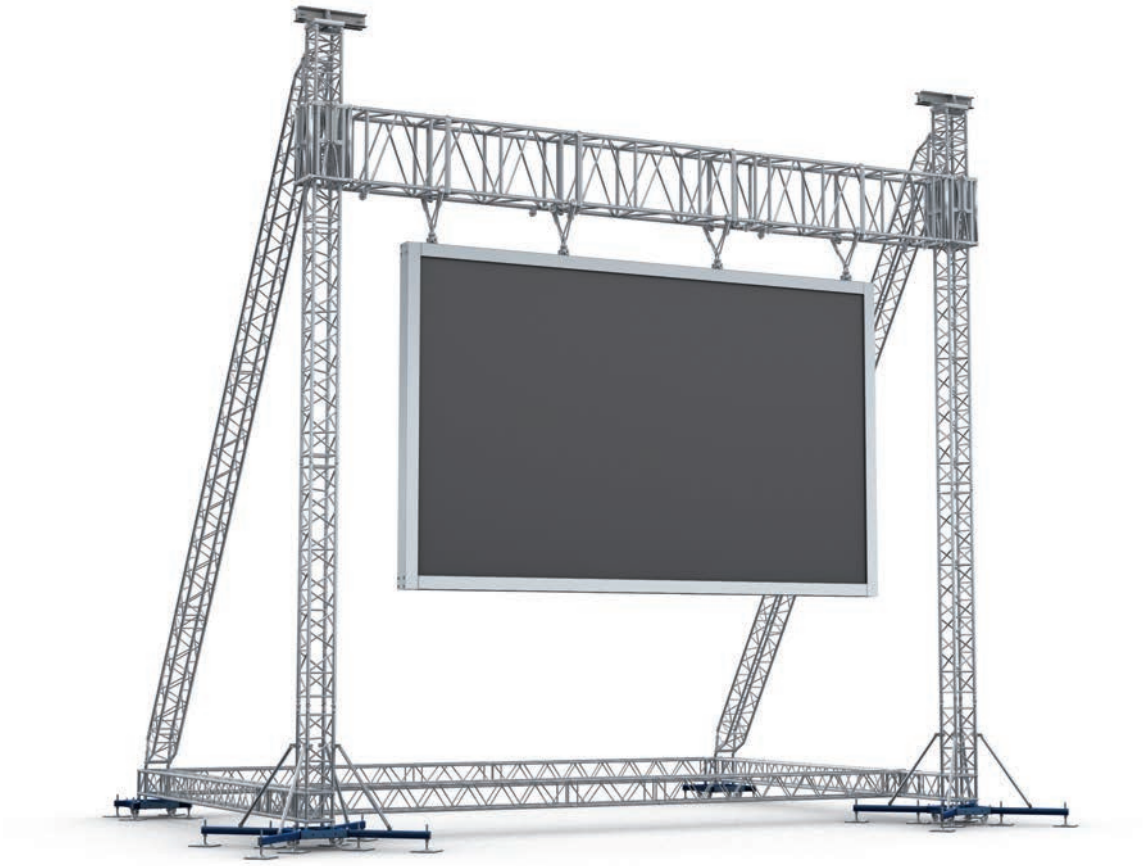

OPERATIONAL SPECIFICATIONS

Design standards	DIN EN 13814 (2005)	Fairground and amusement park machinery and structures
	DIN 1055-4	Actions on structures / wind
	DIN 4113	Design of aluminium structures
	DIN 18800	Design of steel structures
	• All of our structures are produced under EN 1090 EXC2 as standard and include the necessary guy wires, instruction manual and engineering report	
Wind management	Max. wind speed incl. screen	28m/s - 100km/h - 62mph (Max. basic wind speed)
	* Screen to be stabilised against swinging by cross truss at bottom of screen	
Ballast	4x 1400kg / 3808lbs at the end of each outrigger	
	Figure based on screwjack to timber spreader to rubber to concrete / asphalt	
Customized	Customisation, i.e. truss configuration, alternative dimensions, upon request	
	Always verify your screen dimensions, weight and rigging with MILOS	

TRANSPORTATION DATA

	LED screen size ›	10x6 m	32.80x19.70 ft	8x6 m	26.30x19.70 ft		
Self-weight	* Exact self-weight depends on configuration	2400 kg	5291 lbs	1858 kg	4093 lbs		
Transport volume	* Packed in carton boxes and bubble foil	15 m^3	530 ft^3	12 m^3	424 ft^3		

We've got you covered

Roofs

We've got you covered

MDT1 tents

- Perfect for sports, temporary events & parties
- Modular M290 series Event-Tent solutions
- 2-tube Duo construction for reduced weight & transport/storage requirements
- Fast connection for quick, simple and secure assembly
- PVC roof top included
- Optional side walls & digital printing covers available
- Easy anchoring design
- Powder coating on request

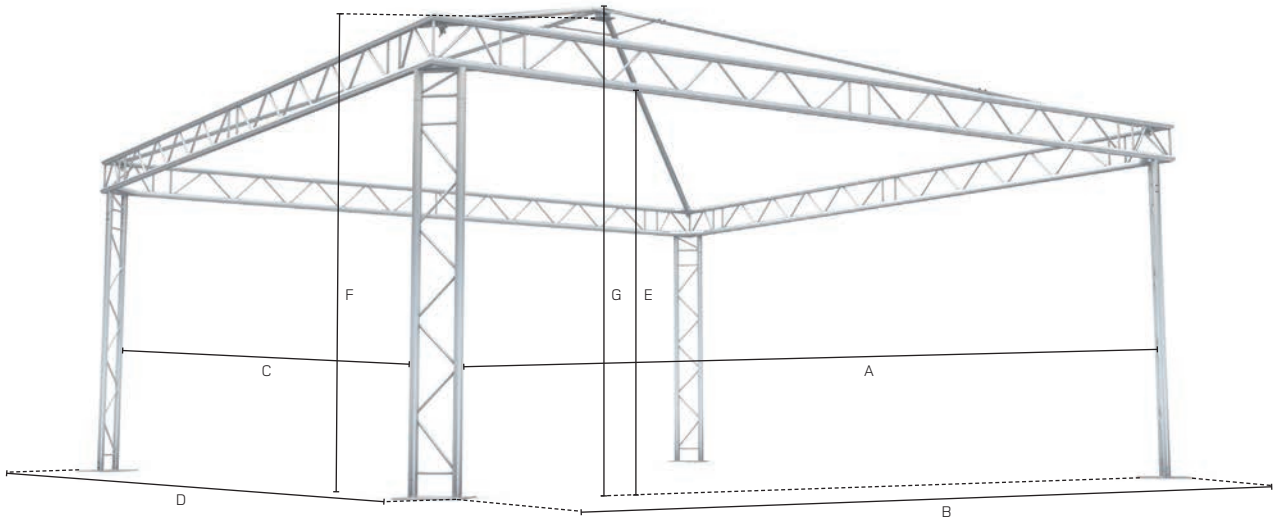

TECHNICAL SPECIFICATIONS

		Stage size ›	6x6 m	19.7 x 19.7 ft	6x5 m	19.7 x 16.4 ft	5x5 m	16.4 x 16.4 ft
Dimensions	A	Internal width	5.56 m	18.24 ft	5.56 m	18.24 ft	4.56 m	14.96 ft
	B	Overall external width	6.20 m	20.34 ft	6.20 m	20.34 ft	5.20 m	17.06 ft
	C	Internal depth	5.56 m	18.24 ft	4.56 m	14.96 ft	4.56 m	14.96 ft
	D	Overall external depth	6.20 m	20.34 ft	5.20 m	17.06 ft	5.20 m	17.06 ft
	E	Side clearance	2.20 m	7.22 ft	2.20 m	7.22 ft	2.20 m	7.22 ft
	F	Middle clearance	3.53 m	11.58 ft	3.43 m	11.25 ft	3.34 m	10.83 ft
	G	Overall height	3.64 m	11.94 ft	3.55 m	11.65 ft	3.45 m	11.32 ft

LOADING CAPACITY

		Stage size ›	6x6 m	19.7 x 19.7 ft	6x5 m	19.7 x 16.4 ft	5x5 m	16.4 x 16.4 ft
Loading capacity	Main grid	Each corner (x5)	100 Kg	220 lbs	100 Kg	220 lbs	100 Kg	220 lbs
	* See structural report for exact load positioning							

OPERATIONAL SPECIFICATIONS

Design standards	DIN 1055-4	Actions on structures / wind
	DIN 4112	Temporary structures
	DIN 4113	Aluminium constructions
	• All of our structures are produced under EN 1090 EXC2 as standard and include the necessary guy wires, instruction manual and engineering report	
Wind management	In service	14m/s - 52km/h - 32.3 mph (Max. gust wind speed)
	No side wall canopies are allowed for the data provided	
Ballast	This can vary from 115kg / 254lbs up to 163kg / 359lbs per column and depends on: • friction material used between screw jacks, padding and sub soil	
Canopy & sidewalls	B1 fire-retardant canopy on request, single piece format Silver-grey; other colours or inside black on request B1 fire-retardant side nets in compliance with latest Eurocodes	
Customized	Customisation (i.e. truss configuration, alternative dimensions) upon request	

TRANSPORTATION DATA

	Stage size ›	6x6 m	19.7 x 19.7 ft	6x5 m	19.7 x 16.4 ft	5x5 m	16.4 x 16.4 ft
Self-weight	* Exact self-weight depends on configuration	170 kg	374 lbs	158 kg	348 lbs	149 kg	328 lbs
Transport volume	* Packed in carton boxes and bubble foil	5.00 m^3	176 ft^3	4.50 m^3	159 ft^3	4.00 m^3	141 ft^3

We've got you covered

MRO sloping roofs

- 8x6m (26.25x19.89 ft) Sloping Roof set-up for temporary events
- Heavy-duty M290 Quatro structure with Duo canopy support
- Gentle sloping roof design using special wedges & reinforced multi-cubes
- Supplied complete with internal wind bracing wires & connection accessories
- Full structural calculation report & build manual available
- PVC roof colour options and side walls available

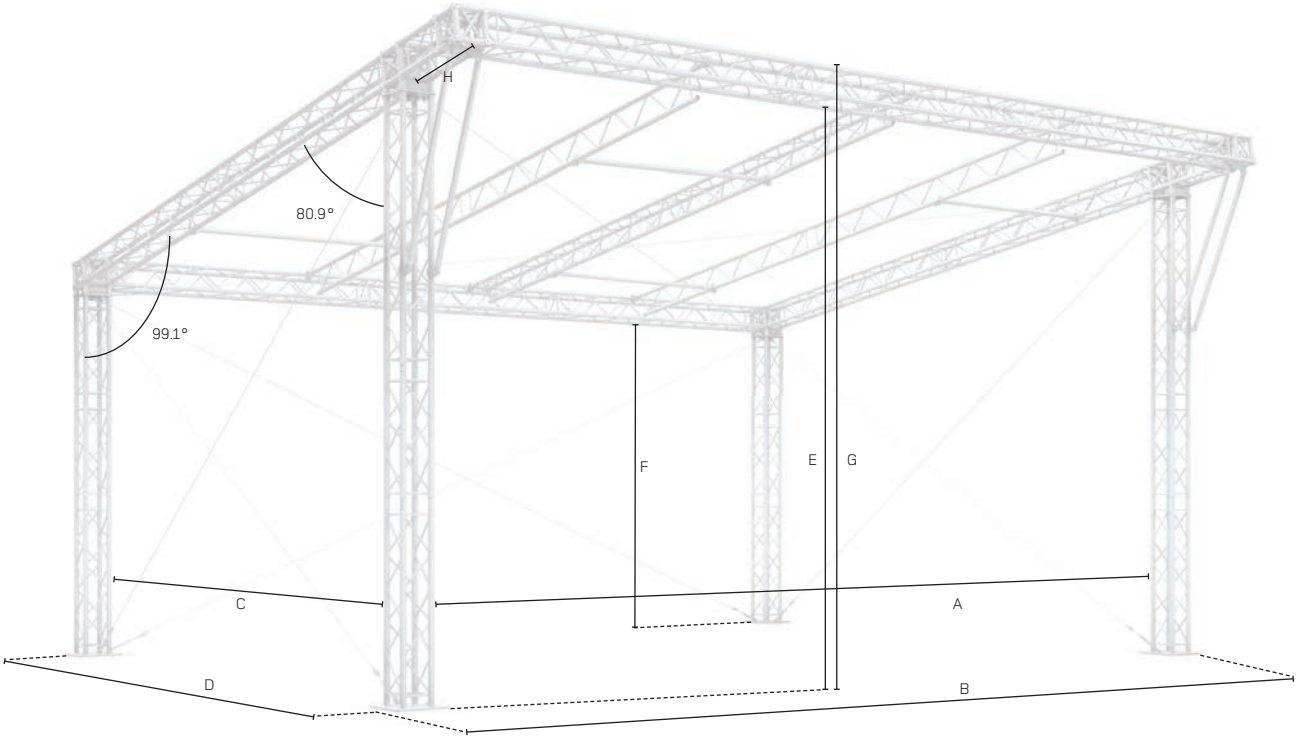

TECHNICAL SPECIFICATIONS

		Stage size ›	8x6 m	26.25x19.70 ft
Dimensions	A	Internal width	8.50 m	27.89 ft
	B	Overall external width	9.24 m	30.31 ft
	C	Internal depth	6.50 m	21.33 ft
	D	Overall external depth	7.29 m	23.92 ft
	E	Front clearance	4.74 m	15.55 ft
	F	Back clearance	3.62 m	11.88 ft
	G	Overall height	5.08 m	16.67 ft
	H	Cantilever depth	0.80 m	2.62 ft

LOADING CAPACITY

		Stage size ›	8x6 m	26.25x19.70 ft
Loading capacity	Back & side truss	Uniformly distributed (UDL)	30kg/m	20lbs/ft
	Middle truss	Uniformly distributed (UDL)	10 kg/m	6 lbs/ft
	Cantilever truss	Uniformly distributed (UDL)	20 kg	14 lbs/ft
	PA load	Point load each cantilever corner	100 kg	220 lbs
	* See structural report for exact load positioning			

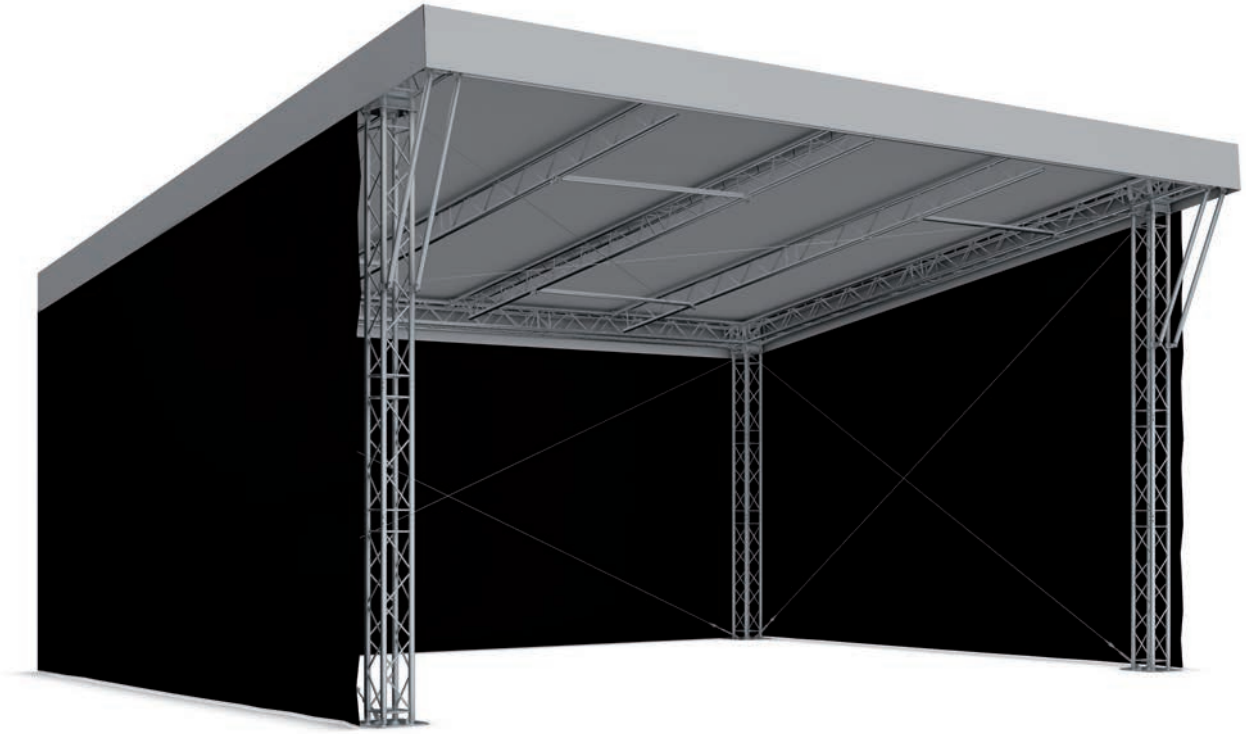

OPERATIONAL SPECIFICATIONS

Design standards	DIN EN 13814 (2005)	Fairground and amusement park machinery and structures
	DIN EN 1991 / Eurocode 1	Actions on structures
	DIN EN 1999 / Eurocode 9	Design of aluminium structures
	DIN EN 1993 / Eurocode 3	Design of steel structures
	• All of our structures are produced under EN 1090 EXC2 as standard and include the necessary guy wires, instruction manual and engineering report	
Wind management	In service	17.8m/s - 64km/h - 40mph (Max. gust wind speed)
	* Calculations based on 100% closed side canopies	
	* Side canopies and loads to be removed above this wind speed if not considered	
	Out of service	28.0m/s - 100km/h - 62mph (Max. gust wind speed)
Ballast	This can vary per tower from 450kg / 992lbs up to 2700kg / 5947lbs and depends on:	
	• If tower bases are interconnected or free standing	
	• Layout of canopies	
	• Self-weight of load or interconnected stage is considered (Might be deducted from ballast under certain conditions)	
	• Friction material used between screw jacks, padding and sub soil	
Canopy & sidewalls	B1 fire retardant canopy on request, single piece format	
	Silvergrey; other colors or inside black on request	
	B1 fire retardant side nets in compliance with latest Eurocodes	
Customized	Customisation (i.e. truss configuration, alternative dimensions, roof adjustability) upon request	

TRANSPORTATION DATA

	Stage size ›	8x6 m	26.25x19.70 ft
Self-weight	* Exact self-weight depends on configuration	600 kg	1322 lbs
Transport volume	* Packed in carton boxes and bubble foil	5.00 m³	176 ft³

We've got you covered

MR1 arched roofs

- 6x4 m (19.69x13.12 ft) & 8x6 m (26.25x19.69 ft) Arched Roof set-up for temporary events
- Heavy-duty M290 Quatro structure with Trio arches
- Fixed leg or self climbing MT1 option 8x6 m only (26.25x19.69 ft)
- Fast connection for quick, simple and secure assembly
- Supplied complete with internal wind bracing wires & connection accessories
- Full structural calculation report & build manual available
- Conversion kits available to upgrade from 6x4 m to 8x6 m
- PVC roof colour and side wall options
- PA wing options available on request

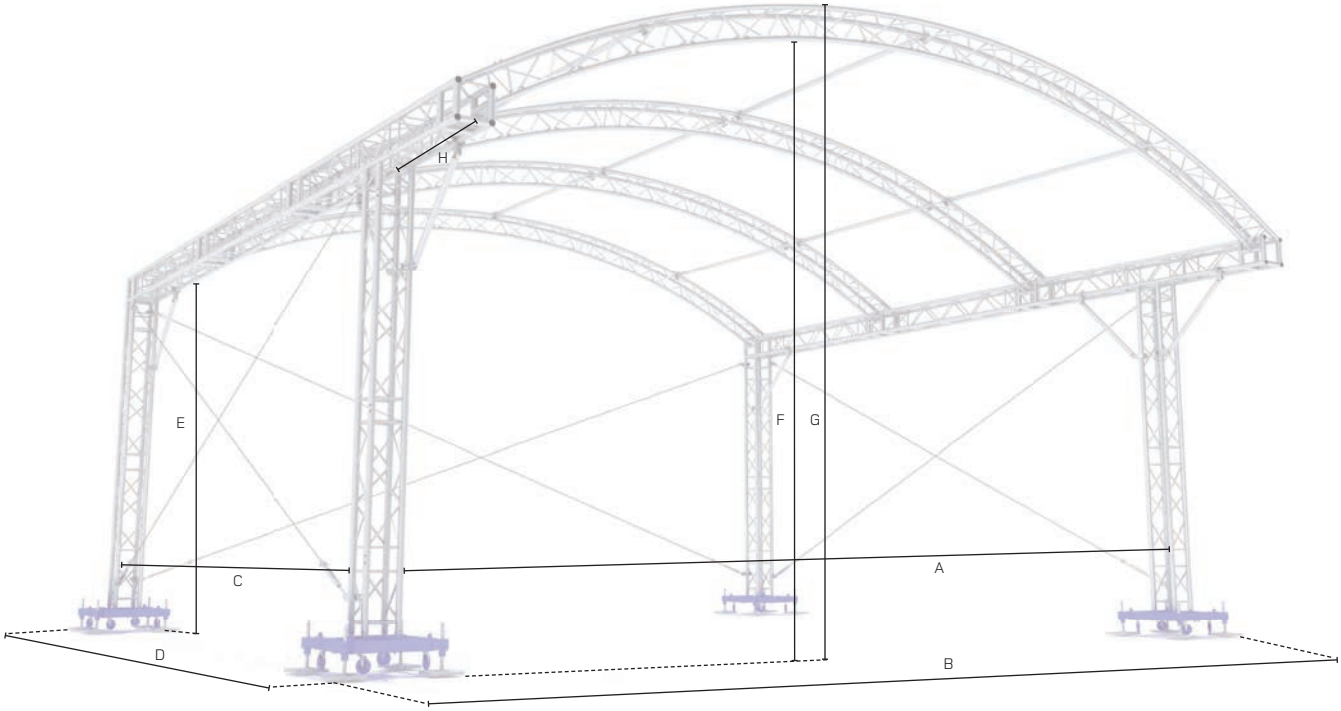

TECHNICAL SPECIFICATIONS

		Stage size ›	8x6 m	26.25x19.70 ft	6x4 m	19.70x13.10 ft		
Dimensions	A	Internal width	8.00 m	26.25 ft	6.00 m	19.69 ft		
	B	Overall external width	9.06 m	29.72 ft	6.06 m	19.88 ft		
	C	Internal depth	6.40 m	20.99 ft	4.40 m	14.44 ft		
	D	Overall external depth	7.48 m	24.54 ft	5.43 m	17.81 ft		
	E	Side clearance	4.43 m	14.53 ft	4.43 m	14.53 ft		
	F	Middle clearance	5.69 m	18.67 ft	5.42 m	17.78 ft		
	G	Overall height	5.96 m	19.55 ft	5.69 m	18.67 ft		
	H	Cantilever depth	1.21 m	3.97 ft	1.21 m	3.97 ft		

LOADING CAPACITY

		Stage size ›	8x6 m	26.25x19.70 ft	6x4 m	19.70x13.10 ft		
Loading capacity	Arches	Uniformly distributed (UDL)	15 kg/m	10 lbs/ft	15 kg/m	10 lbs/ft		
	Side truss	Uniformly distributed (UDL)	20 kg/m	13 lbs/ft	20 kg/m	13 lbs/ft		
	PA load	2x Point load at cantilever	250 kg	551 lbs	250 kg	551 lbs		
	* See structural report for exact load positioning							

OPERATIONAL SPECIFICATIONS

Design standards	DIN EN 13814 (2005)	Fairground and amusement park machinery and structures
	DIN EN 1991 / Eurocode 1	Actions on structures
	DIN EN 1999 / Eurocode 9	Design of aluminium structures
	DIN EN 1993 / Eurocode 3	Design of steel structures
	• All of our structures are produced under EN 1090 EXC2 as standard and include the necessary guy wires, instruction manual and engineering report	
Wind management	In service	17.8m/s - 64km/h - 40mph (Max. gust wind speed)
	* Calculations based on 100% closed side canopies	
	* Side canopies to be removed above this wind speed if not considered	
	Out of service	28.0m/s - 100km/h - 62mph (Max. gust wind speed)
Ballast	This can vary per tower from 350kg / 771lbs up to 2400kg / 5286lbs and depends on:	
	• If tower bases are interconnected or free standing	
	• Layout of canopies	
	• Self-weight of load or interconnected stage is considered (Might be deducted from ballast under certain conditions)	
	• Friction material used between screw jacks, padding and sub soil	
Canopy & sidewalls	B1 fire retardant canopy on request, single piece format or keder profiles on request	
	Silvergrey; other colors or inside black on request	
	B1 fire retardant side nets in compliance with latest Eurocodes	
Customized	Customisation (i.e. truss configuration, alternative dimensions, roof adjustability) upon request	

TRANSPORTATION DATA

	Stage size ›	8x6 m	26.25x19.70 ft	6x4 m	19.70x13.10 ft
Self-weight	* Exact self-weight depends on configuration	1344 kg	2960 lbs	1034 kg	2278 lbs
Transport volume	* Packed in carton boxes and bubble foil	20 m^3	706 ft^3	15 m^3	530 ft^3

We've got you covered

MR1T arched roofs

- 10x6 m (32.81x19.69 ft) Arched Roof set-up for temporary events
- Heavy-duty M290 Quatro structure with Quatro arches
- Fast connection for quick, simple and secure assembly
- Operate with manual chain block or electric chain hoist (bracket required)
- Supplied complete with internal wind bracing wires & connection accessories
- Full structural calculation report & build manual available
- PVC roof colour and side walls options
- PA wing options available on request
- Integrated tower base / stage components available

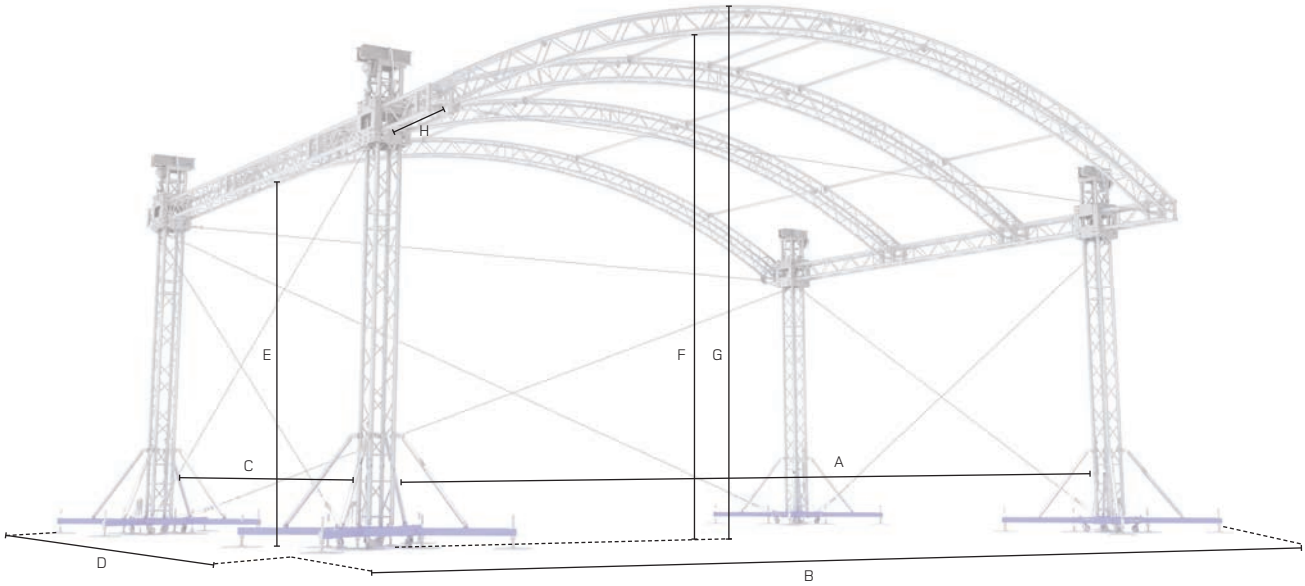

TECHNICAL SPECIFICATIONS

		Stage size ›	10x6 m	32.80x19.70 ft	8x6 m	26.25x19.70 ft		
Dimensions	A	Internal width	10.50 m	34.45 ft	8.50 m	27.89 ft		
	B	Overall external width	12.83 m	42.09 ft	10.83 m	35.53 ft		
	C	Internal depth	6.15 m	20.18 ft	6.15 m	20.18 ft		
	D	Overall external depth	8.48 m	27.82 ft	8.48 m	27.82 ft		
	E	Side clearance	4.05 m	13.29 ft	4.05 m	13.29 ft		
	F	Middle clearance	5.60 m	18.37 ft	5.34 m	17.52 ft		
	G	Overall height	5.91 m	19.39 ft	5.63 m	18.47 ft		
	H	Cantilever depth	1.00 m	3.28ft	1.00 m	3.28 ft		

LOADING CAPACITY

		Stage size ›	10x6 m	32.80x19.70 ft	8x6 m	26.25x19.70 ft		
Loading capacity	Arches front and rear	Uniformly distributed (UDL)	30 kg/m	20 lbs/ft	30 kg/m	20 lbs/ft		
	Arches mid	Uniformly distributed (UDL)	20 kg/m	13 lbs/ft	20 kg/m	13 lbs/ft		
	Side truss	Uniformly distributed (UDL)	30 kg/m	20 lbs/ft	30 kg/m	20 lbs/ft		
	PA load	2x Point load at cantilever	150 kg	330 lbs	150 kg	330 lbs	*If no load on front arch	
	* See structural report for exact load positioning							

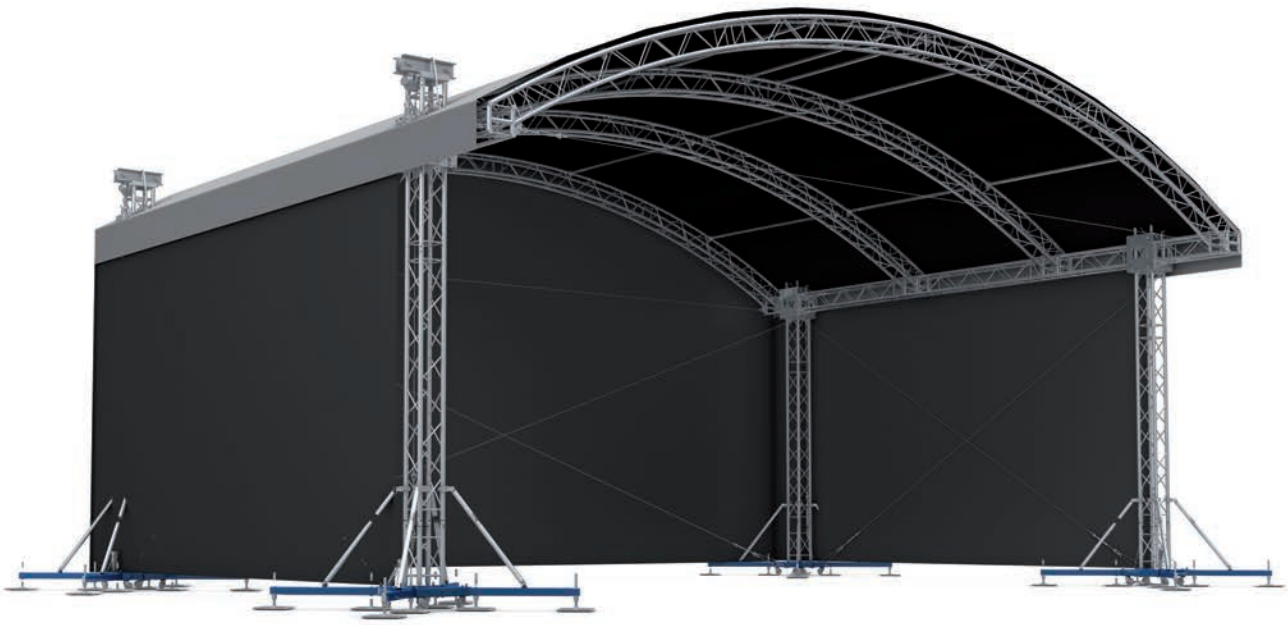

OPERATIONAL SPECIFICATIONS

Design standards	DIN EN 13814 (2005)	Fairground and amusement park machinery and structures
	DIN EN 1991 / Eurocode 1	Actions on structures
	DIN EN 1999 / Eurocode 9	Design of aluminium structures
	DIN EN 1993 / Eurocode 3	Design of steel structures
	• All of our structures are produced under EN 1090 EXC2 as standard and include the necessary guy wires, instruction manual and engineering report	
Wind management	In service	17.8m/s - 64km/h - 40mph (Max. gust wind speed)
	* Calculations based on 100% closed side canopies	
	* Side canopies to be removed above this wind speed if not considered	
	Out of service	28.0m/s - 100km/h - 62mph (Max. gust wind speed)
Ballast	This can vary per tower from 1300kg / 2863lbs up to 3082kg / 6789lbs and depends on:	
	• If tower bases are interconnected or free standing	
	• Layout of canopies	
	• Self-weight of load or interconnected stage is considered (Might be deducted from ballast under certain conditions)	
	• Friction material used between screw jacks, padding and sub soil	
Canopy & sidewalls	B1 fire retardant canopy on request, single piece format or in keder profiles on request	
	Silvergrey; other colors or inside black on request	
	B1 fire retardant side nets in compliance with latest Eurocodes	
Customized	Customisation (i.e. truss configuration, alternative dimensions, roof adjustability) upon request	

TRANSPORTATION DATA

	Stage size ›	10x6 m	32.80x19.70 ft	8x6 m	26.25x19.70 ft
Self-weight	* Exact self-weight depends on configuration	1834 kg	4040 lbs	1034 kg	2278 lbs
Transport volume	* Packed in carton boxes and bubble foil	20 m^3	706 ft^3	15 m^3	530 ft^3

We've got you covered

MR2L saddle roofs

- Lightweight Saddle Roof set-up for temporary events
- MT1 Towers with M390 roof and lightweight canopy support structure
- Fast connection for quick, simple and secure assembly
- Operate with manual chain block or electric chain hoist (bracket required)
- Supplied complete with internal wind bracing wires & connection accessories
- Full structural calculation report & build manual available
- PVC roof colour and side wall options
- Integrated tower base / stage components available

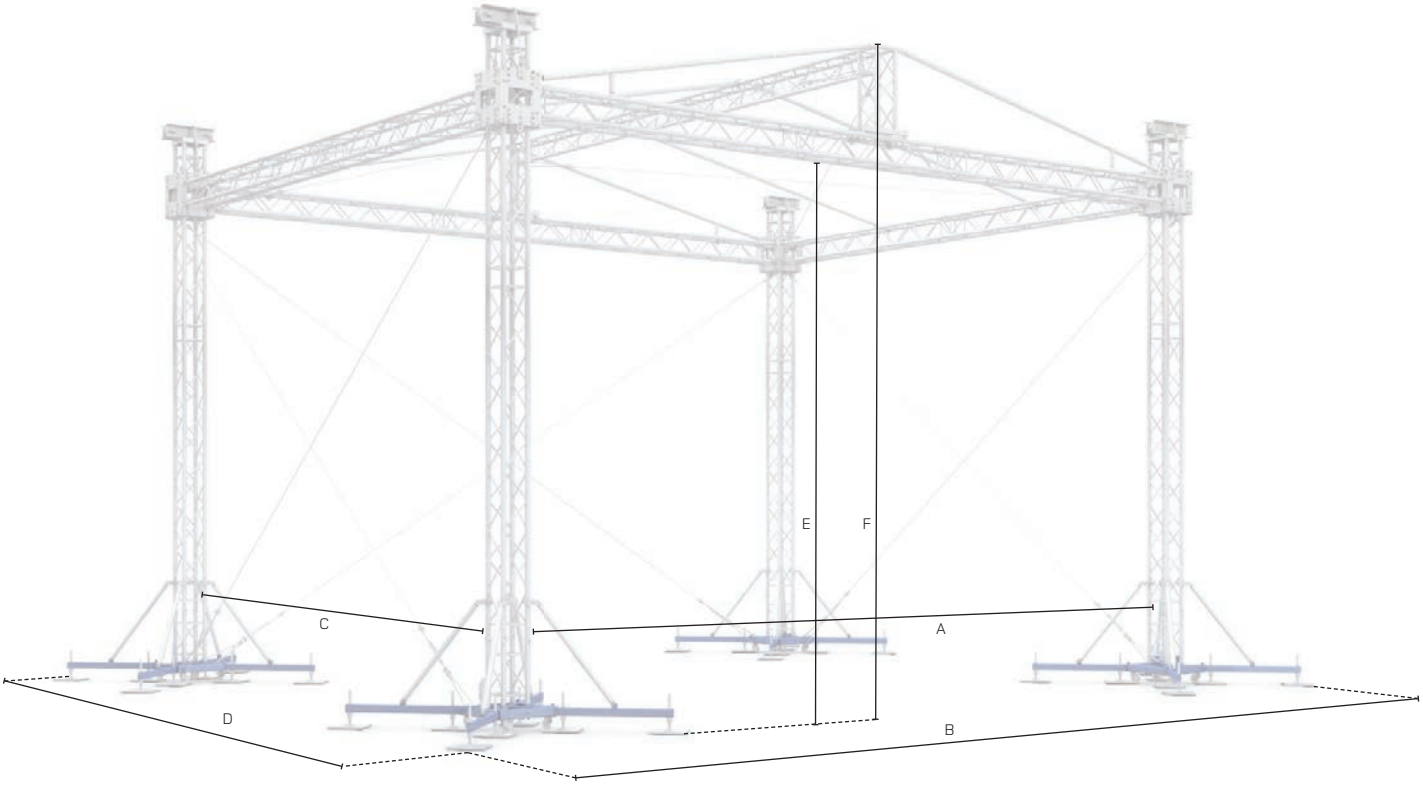

TECHNICAL SPECIFICATIONS

		Stage size ›	8x6 m	26.25x19.70 ft
Dimensions	A	Internal width	8.15 m	26.74 ft
	B	Overall external width	10.48 m	34.38 ft
	C	Internal Depth	6.16 m	20.20 ft
	D	Overall external depth	8.49 m	27.85 ft
	E	Clearance	5.15 m	16.90 ft
	F	Overall height	6.31 m	20.70 ft

LOADING CAPACITY

		Stage size ›	8x6 m	26.25x19.70 ft	
Loading capacity	Main spans	Uniformly distributed (UDL)	20 kg/m	15 lbs/ft	
	Side truss	Uniformly distributed (UDL)	30 kg/m	21 lbs/ft	
	Cantilever	Point load (CPL)	150 kg	330 lbs	100cm truss cantilevered from sleeve-block
	* See structural report for exact load positioning				

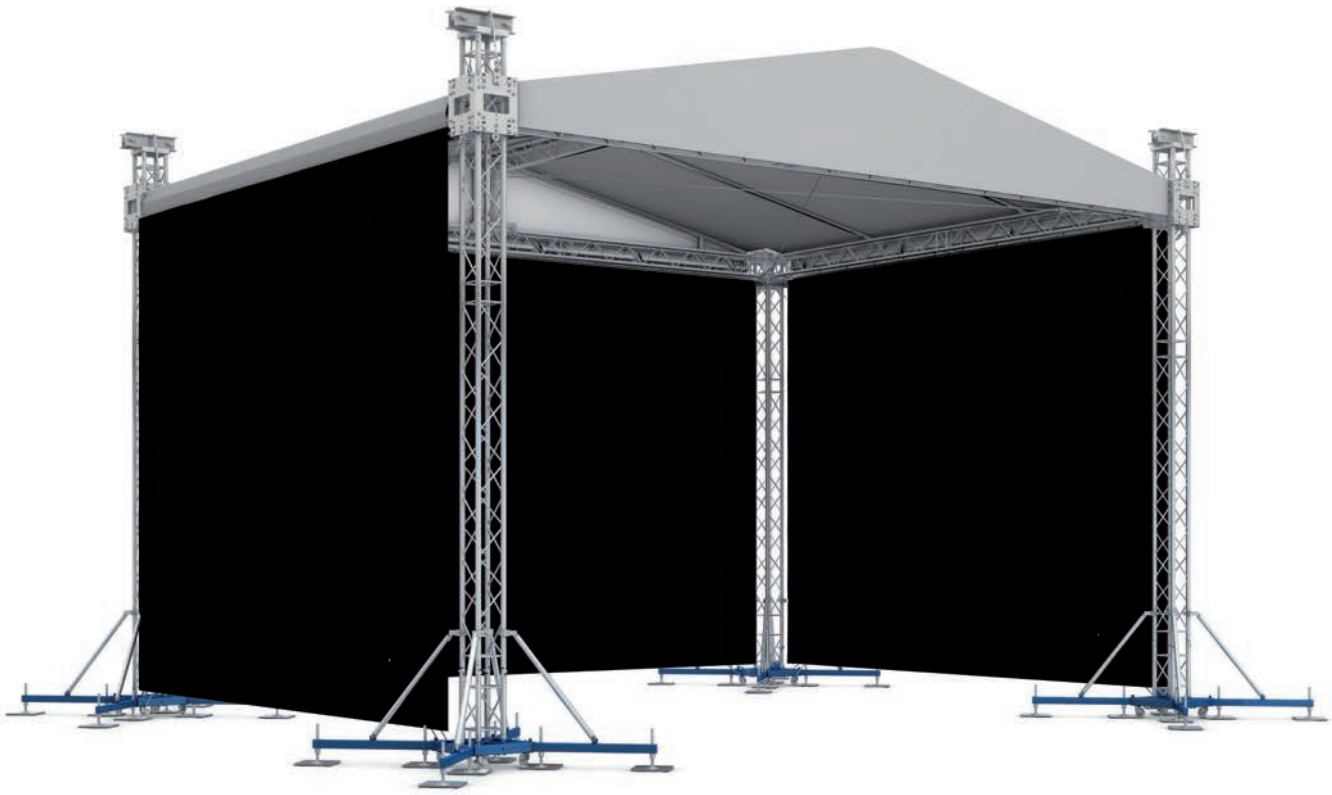

OPERATIONAL SPECIFICATIONS

Design standards	DIN EN 13814 (2005)	Fairground and amusement park machinery and structures
	DIN 1055-4	Actions on structures / wind
	DIN 4113	Design of aluminium structures
	DIN 18800	Design of steel structures
	• All of our structures are produced under EN 1090 EXC2 as standard and include the necessary guy wires, instruction manual and engineering report	
Wind management	In service	17.8m/s - 64km/h - 40mph (Max. gust wind speed)
	* Calculations based on 100% closed side canopies	
	* Side canopies to be removed above this wind speed if not considered	
	Out of service	28.0m/s - 100km/h - 62mph (Max. gust wind speed)
Ballast	This can vary per tower from 1300kg / 2863lbs up to 6000kg / 13216lbs and depends on:	
	• If tower bases are interconnected or if free standing	
	• Layout of canopies	
	• Self-weight of load or interconnected stage is considered (Might be deducted from ballast under certain conditions)	
	• Friction material used between screw jacks, padding and sub soil	
Canopy & sidewalls	B1 fire retardant canopy on request, single piece format	
	Silvergrey; other colors or inside black on request	
	B1 fire retardant side nets in compliance with latest Eurocodes	
Customized	Customisation (i.e. truss configuration, alternative dimensions, roof adjustability) upon request	

TRANSPORTATION DATA

	Stage size ›	8x6 m	26.25x19.70 ft
Self-weight	* Exact self-weight depends on configuration	1500 kg	4040 lbs
Transport volume	* Packed in carton boxes and bubble foil	15 m^3	530 ft^3

We've got you covered

MR2S sloping roofs

- Sloping MR2S Roof set-up for temporary events
- MT1 Towers with angled M390 roof structure and canopy support
- Fast connection for quick, simple and secure assembly
- Operate with manual chain block or electric chain hoist (bracket required)
- Supplied complete with internal wind bracing wires & connection accessories
- Full structural calculation report & build manual available
- PVC roof colour and side wall options
- Integrated tower base / stage components available

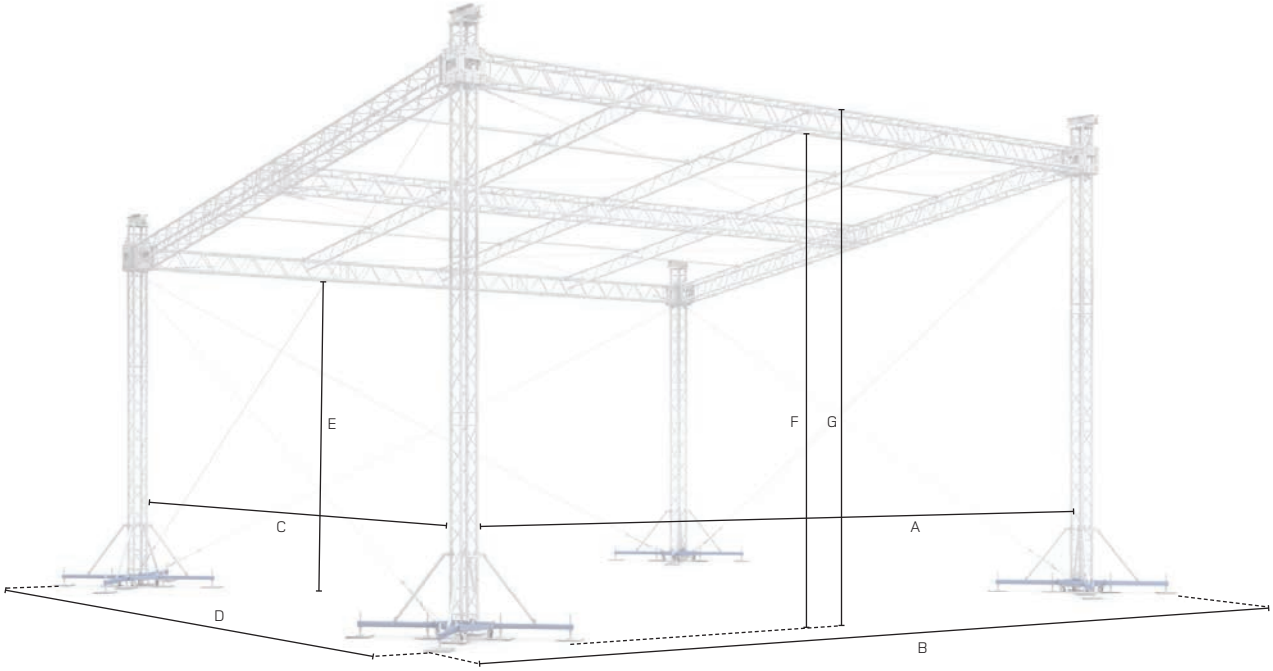

TECHNICAL SPECIFICATIONS

		Stage size ›	12x10 m	39.37x32.80 ft
Dimensions	A	Internal width	12.15 m	39.86 ft
	B	Overall external width	14.49 m	47.54 ft
	C	Internal depth	10.36 m	33.99 ft
	D	Overall external depth	12.69 m	41.63 ft
	E	Back clearance	5.57 m	18.27 ft
	F	Front clearance	7.10 m	23.29 ft
	G	Overall height	8.08 m	26.51 ft

LOADING CAPACITY

		Stage size ›	12x10 m	39.37x32.80 ft
Loading capacity	Back & side truss	Uniformly distributed (UDL)	20 kg/m	13 lbs/ft
	Front & mid truss	Uniformly distributed (UDL)	15 kg/m	10 lbs/ft
	PA load	2x point load 1m to inside front truss	200 kg	441 lbs
	* See structural report for exact load positioning			

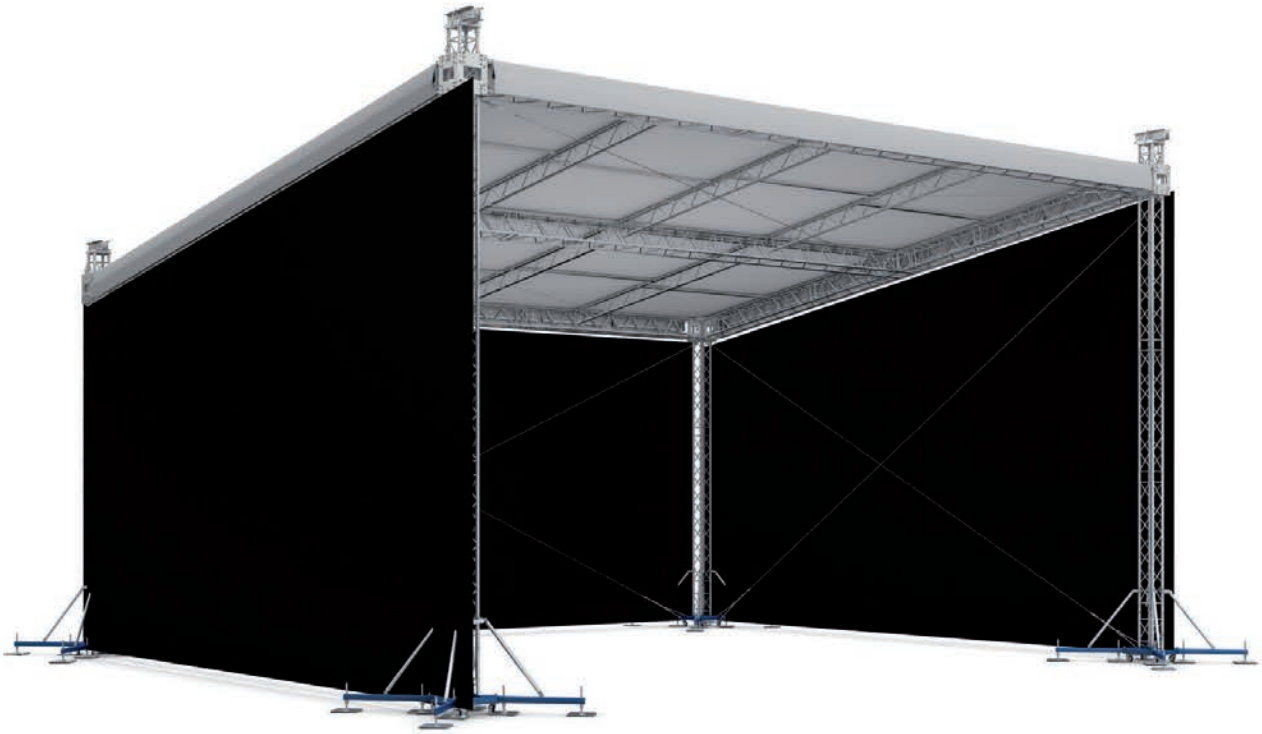

OPERATIONAL SPECIFICATIONS

Design standards	DIN EN 13814 (2005)	Fairground and amusement park machinery and structures
	DIN 1055-4	Actions on structures / wind
	DIN 4113	Design of aluminium structures
	DIN 18800	Design of steel structures
	• All of our structures are produced under EN 1090 EXC2 as standard and include the necessary guy wires, instruction manual and engineering report	
Wind management	In service	17m/s - 61km/h - 38mph (Max. gust wind speed)
	* Calculations based on 7% min permeable side canopies	
	* Side canopies to be removed above this wind speed if not considered	
	Out of service	20m/s - 72km/h - 40mph (Max. gust wind speed)
Ballast	This can vary per tower from 1300kg / 2863lbs up to 6000kg / 13216lbs and depends on:	
	• If tower bases are interconnected or free standing	
	• Lay-out of canopies	
	• Self-weight of load or interconnected stage is considered (Might be deducted from ballast under certain conditions)	
	• Friction material used between screw jacks, padding and sub soil	
Canopy & sidewalls	B1 fire retardant canopy on request, single piece format or in keders, configurable on request	
	Silvergrey; other colors or inside black on request	
	B1 fire retardant side nets in compliance with latest Eurocodes	
Customized	Customisation (i.e. truss configuration, alternative dimensions, roof adjustability) upon request	

TRANSPORTATION DATA

	Stage size ›	12x10 m	39.37x32.80 ft
Self-weight	* Exact self-weight depends on configuration	1600 kg	3524 lbs
Transport volume	* Packed in carton boxes and bubble foil	25 m³	882 ft³

We've got you covered

MR2K keder roofs

- Keder Roof structure for temporary events
- Roof TOP framework can be used with existing ground support inventory
- MT1 Towers with horizontal M390 grid for maximum production rigging
- MT2 Tower with horizontal M520 grid for higher loading also available
- Low profile keder roof construction for ease of installation
- Additional rear towers for LED support using back stage beams
- MT1 Towers with M390 roof and lightweight canopy support structure
- Operate with manual chain block or electric chain hoist (bracket required)
- Supplied complete with internal wind bracing wires & connection accessories
- Full structural calculation report & build manual available
- PVC roof colour and side wall (mesh or solid) options
- Integrated tower base / stage components available

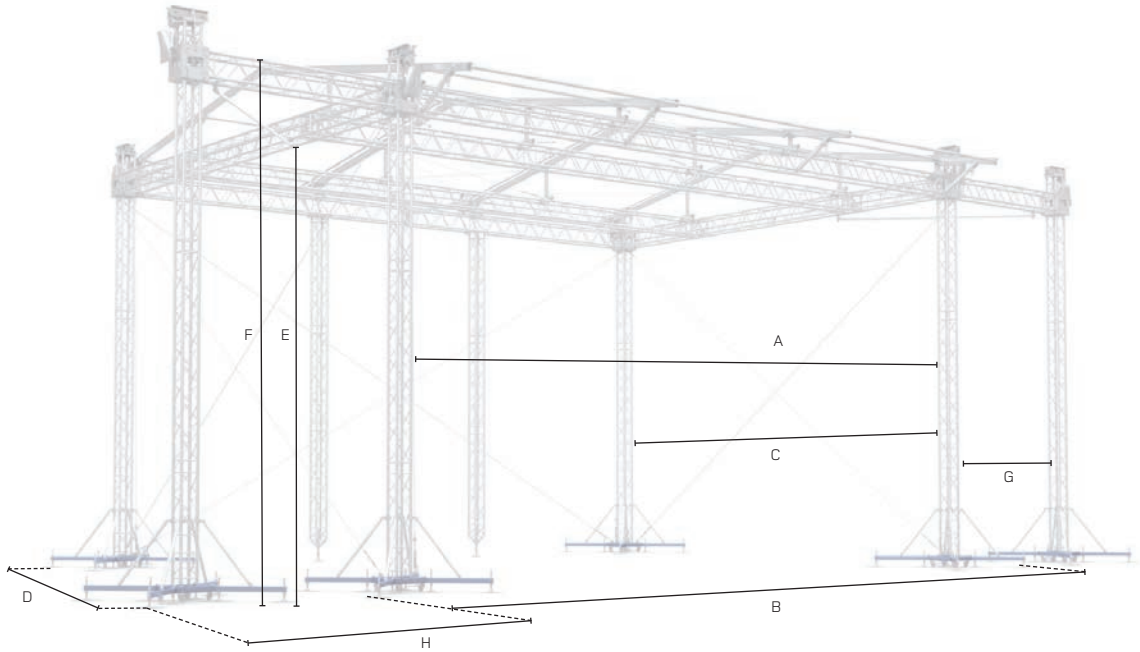

TECHNICAL SPECIFICATIONS

		Stage size ›	15x12 m*	49.21x39.37 ft	12x10 m	39.37x32.81 ft	10x8 m	32.81x26.25 ft
Dimensions	A	Internal width	15.31 m	50.23 ft	12.26 m	40.22 ft	10.26 m	33.66 ft
	B	Overall external width	17.95 m	58.89 ft	14.60 m	47.90 ft	12.60 m	41.34 ft
	C	Internal depth	11.73 m	38.48 ft	9.23 m	30.28 ft	7.23 m	23.72 ft
	D	Overall external depth	14.41 m	47.28 ft	11.57 m	37.96 ft	9.57 m	31.40 ft
	E	Clearance	10.51 m	34.48 ft	7.10 m	23.29 ft	7.10 m	23.29 ft
	F	Overall height	12.19 m	39.99 ft	8.70 m	28.54 ft	8.53 m	27.99 ft
	G	PA wing - Internal width	3.15 m	10.33 ft	3.15 m	10.33 ft	3.15 m	10.33 ft
	H	PA wing - Overall external width	4.26 m	13.98 ft	3.44 m	11.29 ft	3.44 m	11.29 ft

*MT2 Towers with M520 truss grid

LOADING CAPACITY

		Stage size ›	15x12 m	49.21x39.37 ft	12x10 m	39.37x32.81 ft	10x8 m	32.81x26.25 ft
Loading capacity	Main grid	Uniformly distributed (UDL)	3040 kg	6696 lbs	3040 kg	6696 lbs	3040 kg	6696 lbs
		Point loads	7700 kg	16960 lbs	7700 kg	16960 lbs	7700 kg	16960 lbs
	Cantilever	2x Point loads on outer beams	2x 500 kg	2x 1101 lbs	2x 500 kg	2x 1101 lbs	2x 500 kg	2x 1101 lbs
	PA wing	Central Point load (CPL)	1500 kg	3304 lbs	1500 kg	3304 lbs	1500 kg	3304 lbs
	* See structural report for exact load positioning							

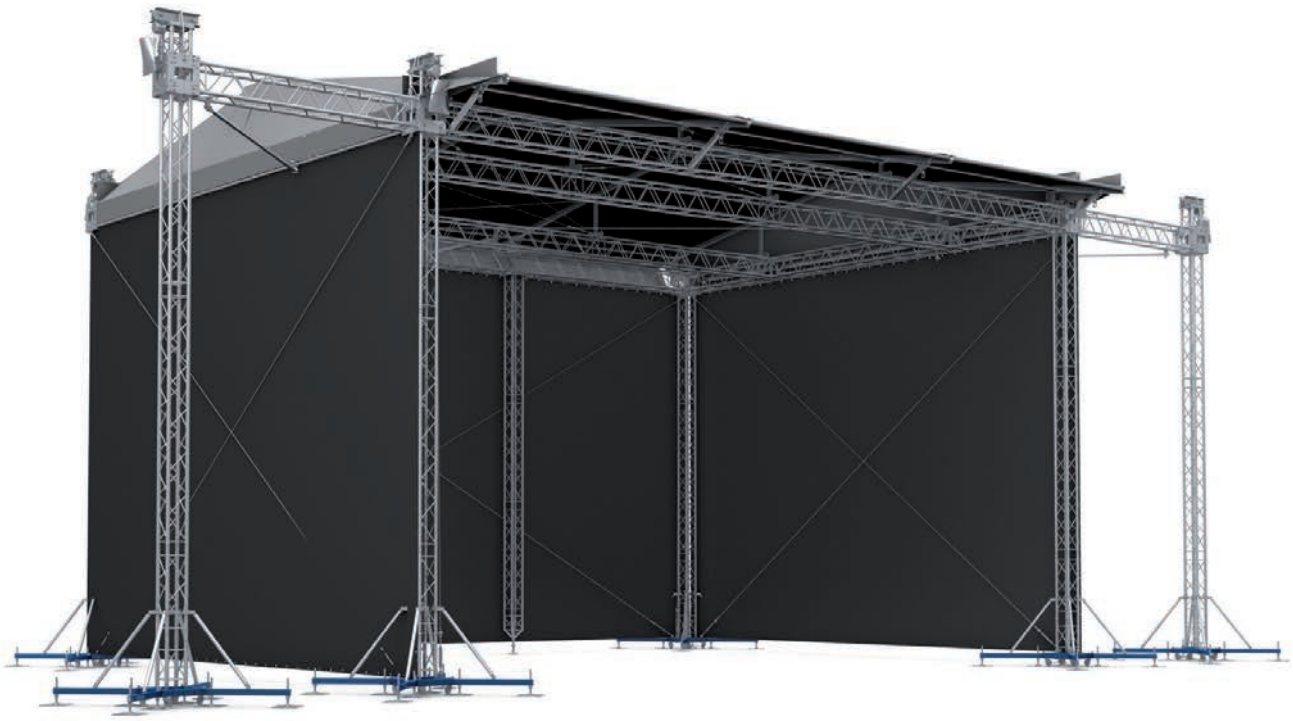

OPERATIONAL SPECIFICATIONS

Design standards	DIN EN 13814 (2012)	Fairground and amusement park machinery and structures
	DIN EN 1991 / Eurocode 1	Actions on structures
	DIN EN 1999 / Eurocode 9	Design of aluminium structures
	DIN EN 1993 / Eurocode 3	Design of steel structures
	• All of our structures are produced under EN 1090 EXC2 as standard and include the necessary guy wires, instruction manual and engineering report	
Wind management	In service	17.8m/s - 64km/h - 40mph (Max. gust wind speed)
	* Calculations based on 100% closed side canopies	
	* Side canopies to be removed above this wind speed if not considered	
	Out of service	28.8m/s - 103km/h-64mph (Max. gust wind speed)
Ballast	This can vary per tower from 1000kg / 2203lbs up to 8000kg/17637lbs and depends on:	
	• If tower bases are interconnected or free standing	
	• Layout of canopies	
	• Self-weight of load or interconnected stage is considered (Might be deducted from ballast under certain conditions)	
	• Friction material used between screw jacks, padding and sub soil	
Canopy & sidewalls	B1 fire retardant canopy on request, in keders, configurable for various sizes	
	Silvergrey; other colors or inside black on request	
	B1 fire retardant side nets in compliance with latest Eurocodes	
Customized	Customisation (i.e. truss configuration, alternative dimensions, roof adjustability) upon request	

TRANSPORTATION DATA

	Stage size ›	15x12 m	49.21x39.37 ft	12x10 m	39.37x32.81 ft	10x8 m	32.81x26.25 ft
Self-weight	* Exact self-weight depends on configuration	5000 kg	11023 lbs	3010 kg	6630 lbs	2785 kg	6134 lbs
Transport volume	* Packed in carton boxes and bubble foil	50 m^3	1765 ft^3	30 m^3	1060 ft^3	25 m^3	882 ft^3

We've got you covered

MR2 saddle roofs

- MR2 Saddle Roof structure for temporary events
- MT1 self-climbing towers 10x6 (32.81x19.69 ft), 10x8 (32.81x26.25 ft), 12x10 (39.37x32.81 ft) options available
- Fast connection for quick, simple and secure assembly
- Operate with manual chain block or electric chain hoist (bracket required)
- Supplied complete with internal wind bracing wires & connection accessories
- Full structural calculation report & build manual available
- PVC roof colour and side wall options
- Integrated tower base / stage components available
- PA wing options available on request

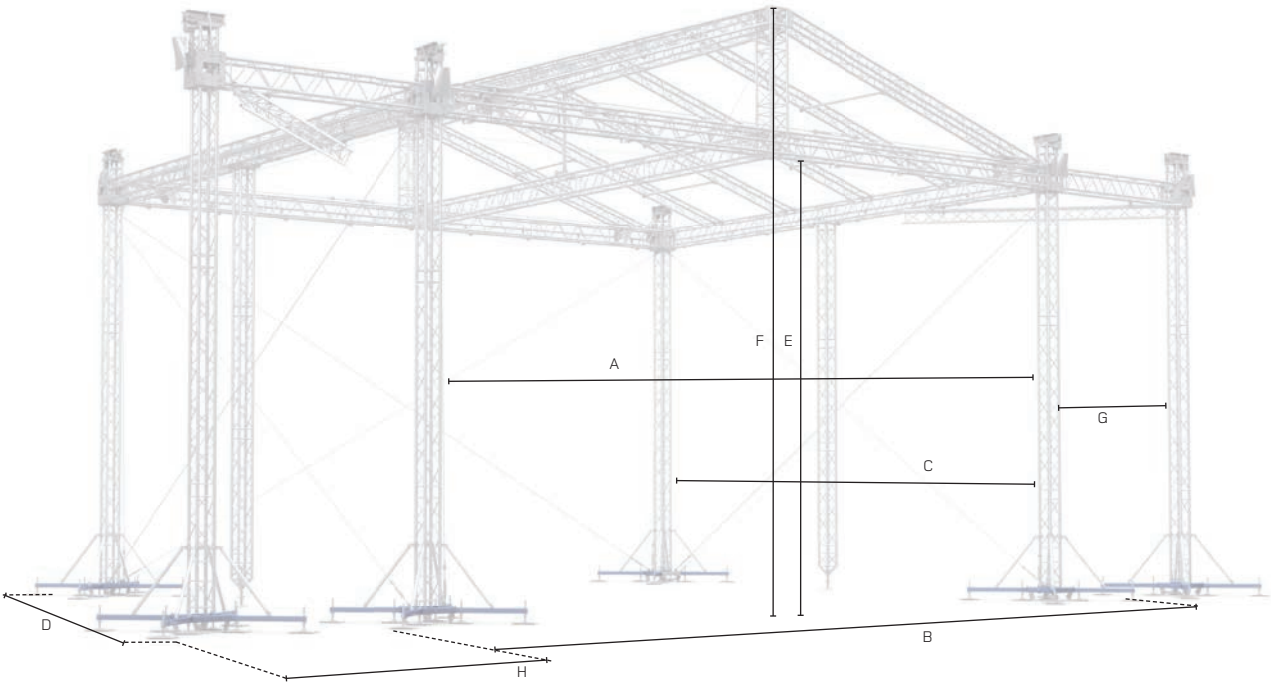

TECHNICAL SPECIFICATIONS

		Stage size ›	12x10 m	39.37x32.80 ft	10x8 m	32.80x26.25 ft	10x6 m	32.80x19.70 ft
Dimensions	A	Internal width	12.30 m	40.35 ft	10.42 m	34.19 ft	10.42 m	34.19 ft
	B	Overall external width	14.64 m	48.03 ft	12.74 m	41.80 ft	12.74 m	41.80 ft
	C	Internal depth	10.60 m	34.78 ft	8.65 m	28.38 ft	6.65 m	21.82 ft
	D	Overall external depth	12.99 m	42.62 ft	10.97 m	35.99 ft	10.97 m	35.99 ft
	E	Clearance	7.12 m	23.36 ft	7.12 m	23.36 ft	7.12 m	23.36 ft
	F	Overall height	9.43 m	30.94 ft	9.14 m	29.99 ft	9.14 m	29.99 ft
	G	PA wing - internal width	3.15 m	10.33 ft	3.15 m	10.33 ft	3.15 m	10.33 ft
	H	PA wing - overall external width	3.44 m	11.29 ft	3.44 m	11.29 ft	3.44 m	11.29 ft

LOADING CAPACITY

		Stage size ›	12x10 m	39.37x32.80 ft	10x8 m	32.80x26.25 ft	10x6 m	32.80x19.70 ft
Loading capacity	Main grid	Uniformly distributed (UDL)	3480 kg	7665 lbs	2160 kg	4758 lbs	1920 kg	4229 lbs
		Point loads 8x400kg + UDL total	4600 kg	10132 lbs	4140 kg	9119 lbs	3980 kg	8767 lbs
	PA wing	Central Point load (CPL)	1500 kg	3304 lbs	- kg	- lbs	- kg	- lbs
	Cantilever	Point load (CPL)	- kg	- lbs	150 kg	330.4 lbs	150 kg	330 lbs
	* See structural report for exact load positioning							

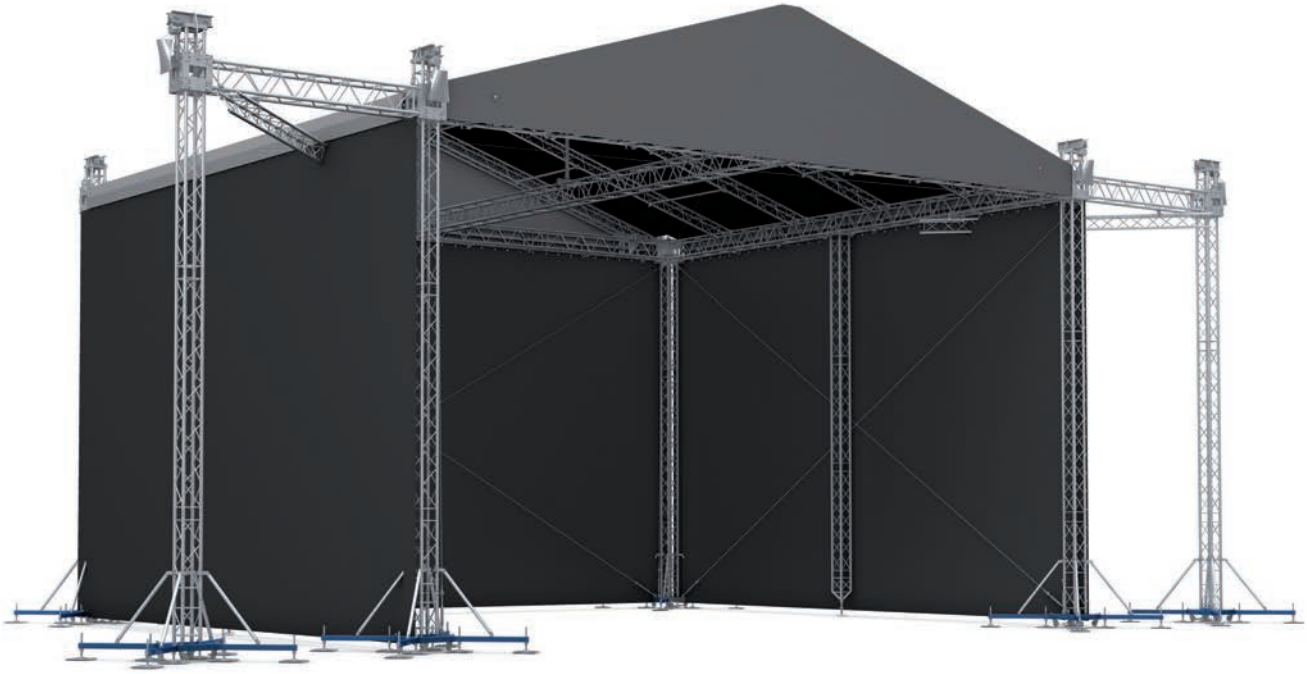

OPERATIONAL SPECIFICATIONS

Design standards	DIN EN 13814 (2005)	Fairground and amusement park machinery and structures
	DIN 1055-4	Actions on structures / wind
	DIN 4113	Design of aluminium structures
	DIN 18800	Design of steel structures
	• All of our structures are produced under EN 1090 EXC2 as standard and include the necessary guy wires, instruction manual and engineering report	
Wind management	In service	17.8m/s - 64km/h - 40mph (Max. gust wind speed)
	* Calculations based on 100% closed side canopies	
	* Side canopies to be removed above this wind speed if not considered	
	Out of service	29.6m/s - 106km/h-66mph (Max. gust wind speed)
	Training recommended	
Ballast	This can vary per tower from 200kg / 440lbs up to 5300kg / 11674lbs and depends on:	
	• If tower bases are interconnected or free standing	
	• Layout of canopies	
	• Self-weight of load or interconnected stage is considered (Might be deducted from ballast under certain conditions)	
	• Friction material used between screw jacks, padding and sub soil	
Canopy & sidewalls	B1 fire retardant canopy on request, single piece format or keder profiles	
	Silvergrey; other colors or inside black on request	
	B1 fire retardant side nets in compliance with latest Eurocodes	
Customized	Customisation (i.e. truss configuration, alternative dimensions, roof adjustability) upon request	

TRANSPORTATION DATA

	Stage size ›	12x10 m	39.37x32.80 ft	10x8 m	32.80x26.25 ft	10x6 m	32.80x19.70 ft
Self-weight	* Exact self-weight depends on configuration	2100 kg	4626 lbs	1950 kg	4295 lbs	1785 kg	3932 lbs
Transport volume	* Packed in carton boxes and bubble foil	30 m^3	1060 ft^3	25 m^3	882 ft^3	20 m^3	706 ft^3

We've got you covered

MR3 saddle roofs

- MR3 Saddle Roof structure for temporary events
- MT2 self-climbing towers up to 12.5 m high (41.01 ft) with M520 main grid
- Various standard sizes and optional front cantilever available
- Fast connection for quick, simple and secure assembly
- Supplied complete with internal wind bracing wires & connection accessories
- Full structural calculation report & build manual available
- PVC roof colour and side wall options
- Integrated tower base / stage components available
- PA wing options available on request

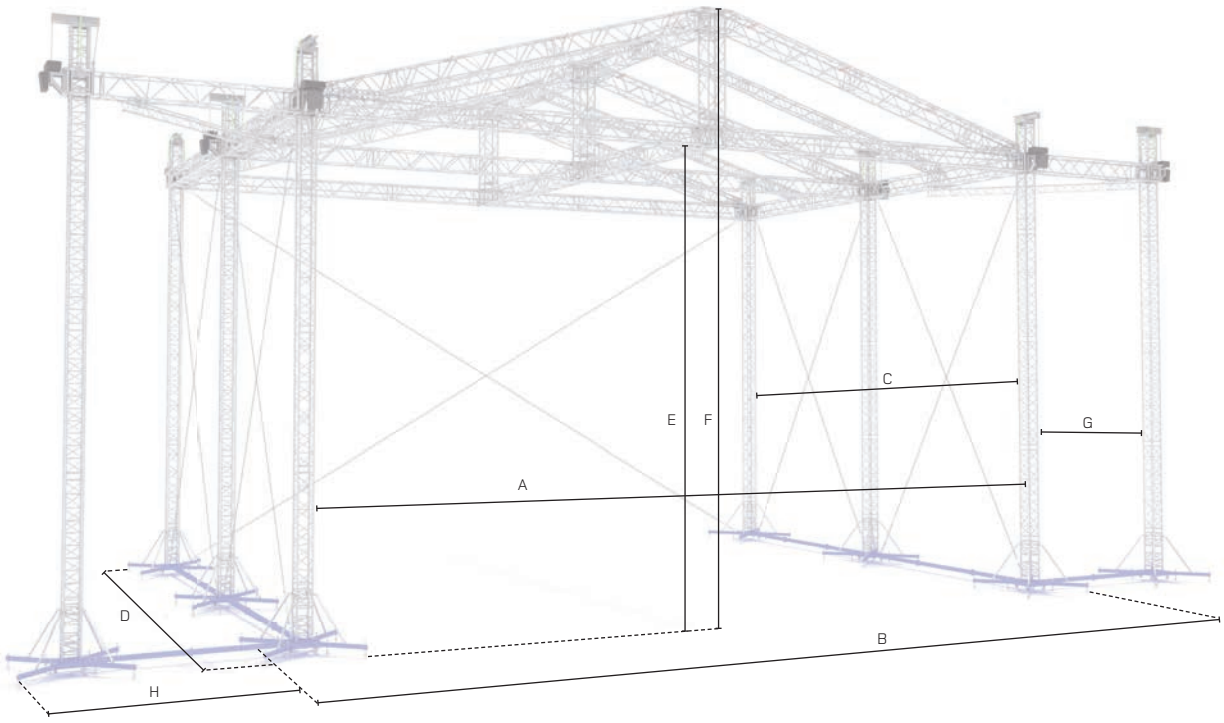

TECHNICAL SPECIFICATIONS

		Stage size ›	20x14 m	65.62x45.93 ft	18x14 m	59.06x45.93 ft		
Dimensions	A	Internal width	20.53 m	67.34 ft	18.53 m	60.79 ft		
	B	Overall external width	23.15 m	75.95 ft	21.15 m	69.39 ft		
	C	Internal depth	14.80 m	48.56 ft	14.80 m	48.56 ft		
	D	Overall external depth	16.65 m	54.63 ft	16.65 m	54.63 ft		
	E	Clearance	11.50 m	37.73 ft	11.50 m	37.73 ft		
	F	Overall height	15.02 m	49.28 ft	15.02 m	49.28 ft		
	G	PA wing - internal width	4.31 m	14.14 ft	4.31 m	14.14 ft		
	H	PA wing - overall external width	4.71 m	15.45 ft	4.71 m	15.45 ft		

LOADING CAPACITY

		Stage size ›	20x14 m	65.62x45.93 ft	18x14 m	59.06x45.93 ft		
Loading capacity	Main grid	Uniformly distributed (UDL)	7420 kg	16344 lbs	7791 kg	17161 lbs		
		Point loads	7500 kg	16520 lbs	7875 kg	17346 lbs		
	PA wing	Central Point load (CPL)	1500 kg	3304 lbs	1500 kg	3304 lbs		
	* See structural report for exact load positioning							

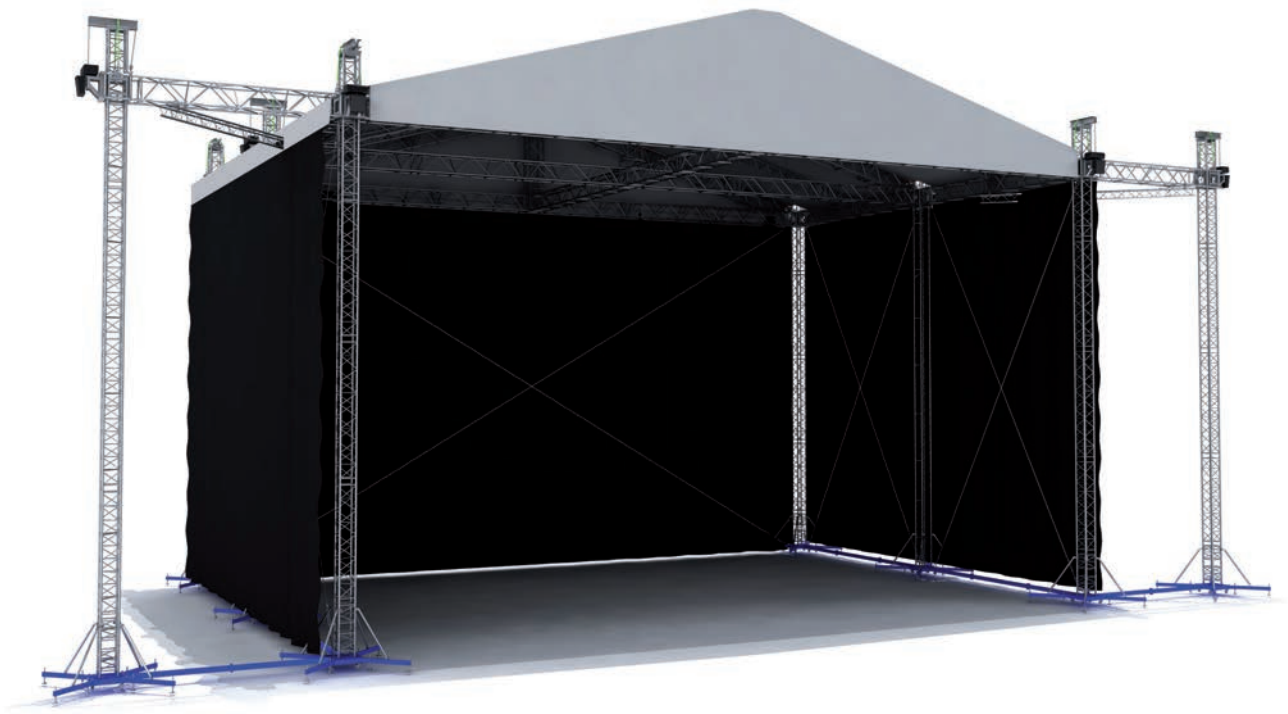

OPERATIONAL SPECIFICATIONS

Design standards	DIN EN 13814 (2005)	Fairground and amusement park machinery and structures
	DIN 1055-4	Actions on structures / wind
	DIN 4113	Design of aluminium structures
	DIN 18800	Design of steel structures
	• All of our structures are produced under EN 1090 EXC2 as standard and include the necessary guy wires, instruction manual and engineering report	
Wind management	In service	17.8m/s - 64km/h - 40mph (Max. gust wind speed)
	* Calculations based on 100% closed side canopies	
	* Side canopies to be removed above this wind speed if not considered	
	Out of service	27.5m/s - 100km/h - 62mph (Max. gust wind speed)
	Training recommended	
Ballast	Can vary from 3900kg / 8590bs up to 10400kg / 22907lbs per tower and depends on:	
	• If tower bases are interconnected or free standing	
	• Layout of canopies	
	• Self-weight of load or interconnected stage is considered (Might be deducted from ballast under certain conditions)	
	• Friction material used between screw jacks, padding and sub soil	
Canopy & sidewalls	B1 fire retardant canopy on request, keder profiles optional	
	Silvergrey; other colors or inside black on request	
	B1 fire retardant side nets in compliance with latest Eurocodes	
Customized	Customisation (i.e. truss configuration, alternative dimensions, roof adjustability) upon request	

TRANSPORTATION DATA

	Stage size ›	20x14 m	65.62x45.93 ft	18x14 m	59.06x45.93 ft
Self-weight	* Exact self-weight depends on configuration	7300 kg	16079 lbs	6980 kg	15374 lbs
Transport volume	* Packed in carton boxes and bubble foil	80 m^3	2825 ft^3	70 m^3	2472 ft^3

We've got you covered

MR4 arched roofs

- MR4 Mega-Arc Roof structure for temporary events
- MT2 self-climbing towers up to 12.5 m high (41.01 ft) with M400 / M520 main grid
- Keystone 'arch' created using standard straight sections & angled hinge parts
- Fast connection for quick, simple and secure assembly
- Supplied complete with internal wind bracing wires & connection accessories
- Full structural calculation report & build manual available
- PVC roof colour and side wall options
- Integrated tower base / stage components available
- PA wing options available on request

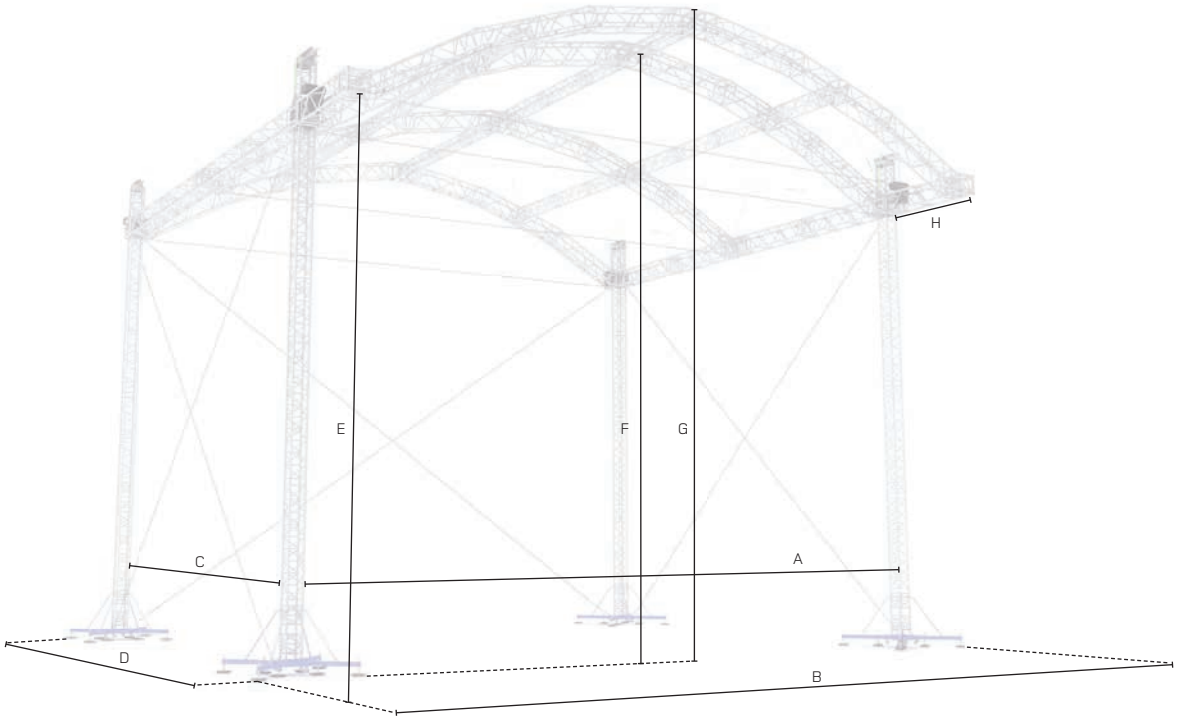

TECHNICAL SPECIFICATIONS

		Stage size ›	20x12 m	65.62x39.37 ft	16x12 m	52.50x39.37 ft		
Dimensions	A	Internal width	20.50 m	67.26 ft	16.50 m	54.13 ft		
	B	Overall external width	23.12 m	75.85 ft	19.12 m	62.73 ft		
	C	Internal depth	13.03 m	42.75 ft	13.03 m	42.75 ft		
	D	Overall external depth	15.65 m	51.35 ft	15.65 m	51.35 ft		
	E	Side clearance	11.53 m	37.83 ft	11.53 m	37.83 ft		
	F	Middle clearance	14.30 m	46.92 ft	14.30 m	46.92 ft		
	G	Overall height	14.90 m	48.88 ft	14.90 m	48.88 ft		
	H	Cantilever depth	2.70 m	8.86 ft	2.70 m	8.86 ft		

LOADING CAPACITY

		Stage size ›	20x12 m	65.62x39.37 ft	16x12 m	52.50x39.37 ft		
Loading capacity	Main grid	Uniformly distributed (UDL)	5456 kg	12018 lbs	4365 kg	9615 lbs		
		or 8x Point loads of 800kg	8000 kg	17621 lbs	6400 kg	14097 lbs		
	PA wing	Central Point load (CPL)	1500 kg	3304 lbs	1500 kg	3304 lbs		
	* See structural report for exact load positioning							

OPERATIONAL SPECIFICATIONS

Design standards	DIN EN 13814 (2005)	Fairground and amusement park machinery and structures
	DIN 1055-4	Actions on structures / wind
	DIN 4113	Design of aluminium structures
	DIN 18800	Design of steel structures
	• All of our structures are produced under EN 1090 EXC2 as standard and include the necessary guy wires, instruction manual and engineering report	
Wind management	In service	20.8m/s - 74km/h - 46mph (Max. gust wind speed)
	* Calculations based on 30% minimum permeable side canopies	
	* Side canopies to be removed above this windspeed if not considered	
	Out of service	28.3m/s - 100km/h - 62mph (Max. gust wind speed)
	Training recommended	
Ballast	This can vary per tower from 4750kg / 10462bs up to 12634kg / 27828lbs and depends on:	
	• If tower bases are interconnected or free standing	
	• Layout of canopies	
	• Self-weight of load or interconnected stage is considered (Might be deducted from ballast under certain conditions)	
	• Friction material used between screw jacks, padding and sub soil	
Canopy & sidewalls	B1 fire retardant canopy on request, in keders	
	Silvergrey; other colors or inside black on request	
	B1 fire retardant side nets in compliance with latest Eurocodes	
Customized	Customisation (i.e. truss configuration, alternative dimensions, roof adjustability) upon request	

TRANSPORTATION DATA

	Stage size ›	20x12 m	65.62x39.37 ft	16x12 m	52.50x39.37 ft		
Self-weight	* Exact self-weight depends on configuration	4680 kg	10308 lbs	3200 kg	7048 lbs		
Transport volume	* Packed in carton boxes and bubble foil	80 m^3	2825 ft^3	70 m^3	2472 ft^3		

We've got you covered

MR5 pitched roofs

- MR5 Mega-Pitched Roof structure for temporary events
- MT2 / MT3 self-climbing towers up to 12.5 m high (41.01 ft) with M950 main grid
- M950 folding series used to minimise storage and transportation volume
- Easy back stage area integration with main structure
- Supplied complete with internal wind bracing wires & connection accessories
- Full structural calculation report & build manual available
- PVC roof colour and side wall keder options
- Integrated tower base / stage components available
- PA / Video wing options available on request

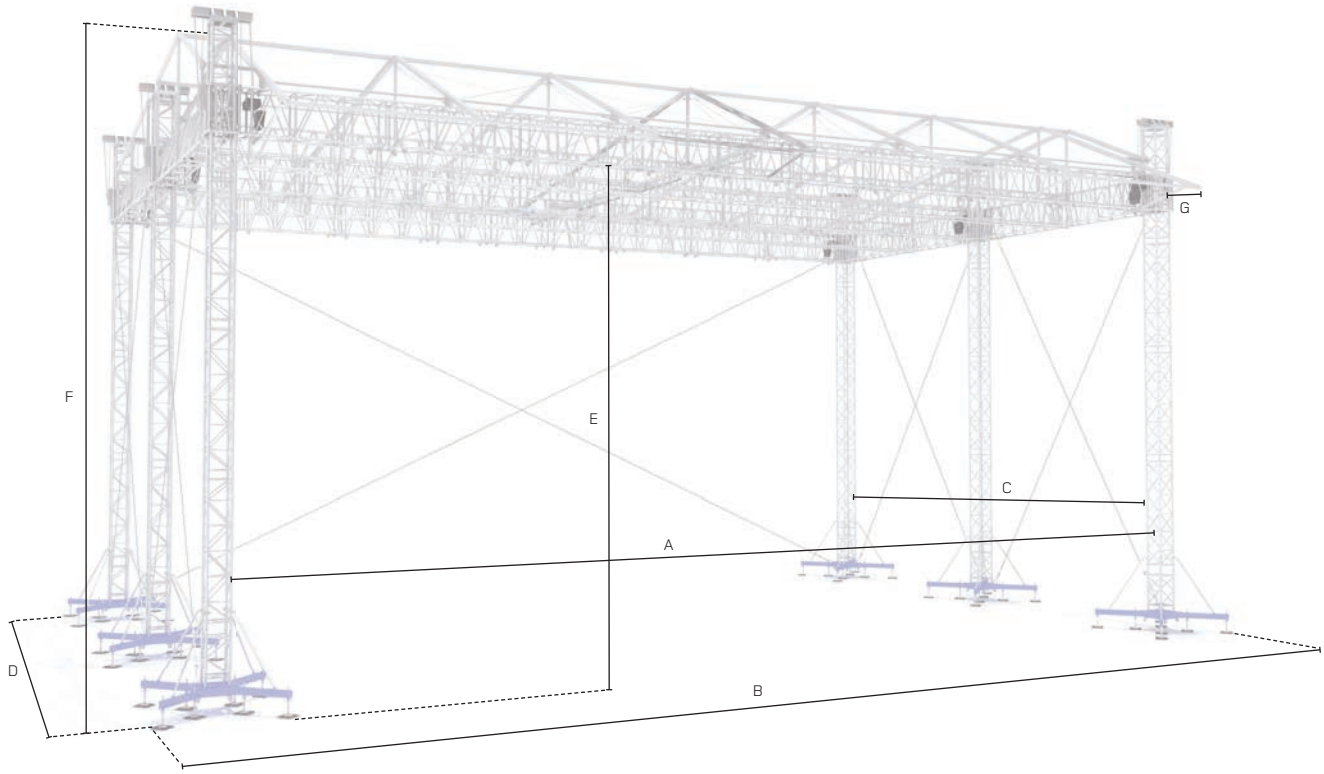

TECHNICAL SPECIFICATIONS

		Stage size ›	24x14 m	78.74x45.93 ft	20x14 m	65.62x45.93 ft	18x14 m	59.06x45.93 ft
Dimensions	A	Internal width	24.76 m	81.23 ft	20.76 m	68.11 ft	18.76 m	61.55 ft
	B	Overall external width	27.84 m	91.34 ft	23.84 m	78.22 ft	21.84 m	71.65 ft
	C	Internal depth	14.74 m	48.36 ft	14.74 m	48.36 ft	14.74 m	48.36 ft
	D	Overall external depth	17.80 m	58.40 ft	17.80 m	58.40 ft	17.80 m	58.40 ft
	E	Clearance	11.48 m	37.66 ft	11.48 m	37.66 ft	11.48 m	37.66 ft
	F	Overall height	14.43 m	47.34 ft	14.43 m	47.34 ft	14.43 m	47.34 ft
	G	Cantilever depth	2.02 m	6.63 ft	2.02 m	6.63 ft	2.02 m	6.63 ft

LOADING CAPACITY

		Stage size ›	24x14 m	78.74x45.93 ft	20x14 m	65.62x45.93 ft	18x14 m	59.06 x45.93 ft
Loading capacity	Main grid	Uniformly distributed (UDL)	12500 kg	27533 lbs	12500 kg	27533 lbs	12500 kg	27533 lbs
		Point loads	17500 kg	38546 lbs	17500 kg	38546 lbs	17500 kg	38546 lbs
	PA wing	Central point load (CPL)	1500 kg	3304 lbs	1500 kg	3304 lbs	1500 kg	3304 lbs
	* See structural report for exact load positioning							

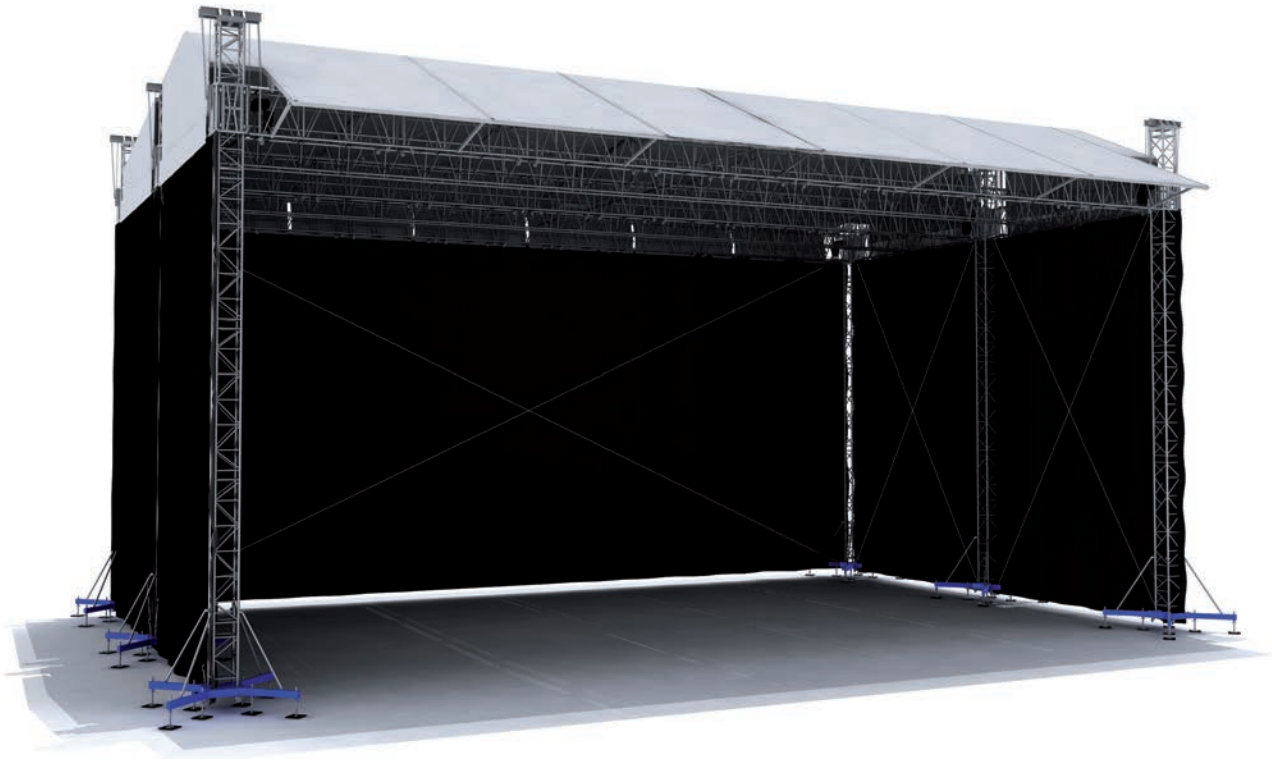

OPERATIONAL SPECIFICATIONS

Design standards	DIN EN 13814 (2005)	Fairground and amusement park machinery and structures
	DIN 1055-4	Actions on structures / wind
	DIN 4113	Design of aluminium structures
	DIN 18800	Design of steel structures
	• All of our structures are produced under EN 1090 EXC2 as standard and include the necessary guy wires, instruction manual and engineering report	
Wind management	In service	17.8m/s - 64km/h - 40mph (Max. gust wind speed)
	* Calculations based on 100% closed side canopies	
	* Side canopies to be removed above this wind speed if not considered	
	Out of service	28.3m/s - 100km/h - 62mph (Max. gust wind speed)
	Training recommended	
Ballast	This can vary per tower from 2375kg / 5231lbs up to 12700kg / 27973lbs and depends on:	
	• If tower bases are interconnected or free standing	
	• Layout of canopies	
	• Self-weight of load or interconnected stage is considered (Might be deducted from ballast under certain conditions)	
	• Friction material used between screw jacks, padding and sub soil	
Canopy & sidewalls	B1 fire retardant canopy, in keders, configurable for different sizes on request	
	Silvergrey; other colors or inside black on request	
	B1 fire retardant side nets in compliance with latest Eurocodes	
Customized	Customisation (i.e. truss configuration, alternative dimensions, roof adjustability) upon request	

TRANSPORTATION DATA

	Stage size ›	24x14 m	78.74x45.93 ft	20x14 m	65.62x45.93 ft	18x14 m	59.06x45.93 ft
Self-weight	* Exact self-weight depends on configuration	7200 kg	15859 lbs	6435 kg	14174 lbs	6600 kg	14537 lbs
Transport volume	* Packed in carton boxes and bubble foil	120 m^3	4237 ft^3	100 m^3	3531 ft^3	90 m^3	3178 ft^3

We've got you covered

BAT roofs

- Iconic BAT Roof structure for temporary events
- Special cross - tensioned tower masts requiring no heavy machinery for assembly
- Various sizes using various truss ranges available
- Includes back stage area
- Supplied complete with internal wind bracing wires & connection accessories
- Full structural calculation report & build manual available
- PVC roof colour and side wall options
- Integrated base ring-beam using heavy-duty M290 series
- Optional front cantilever

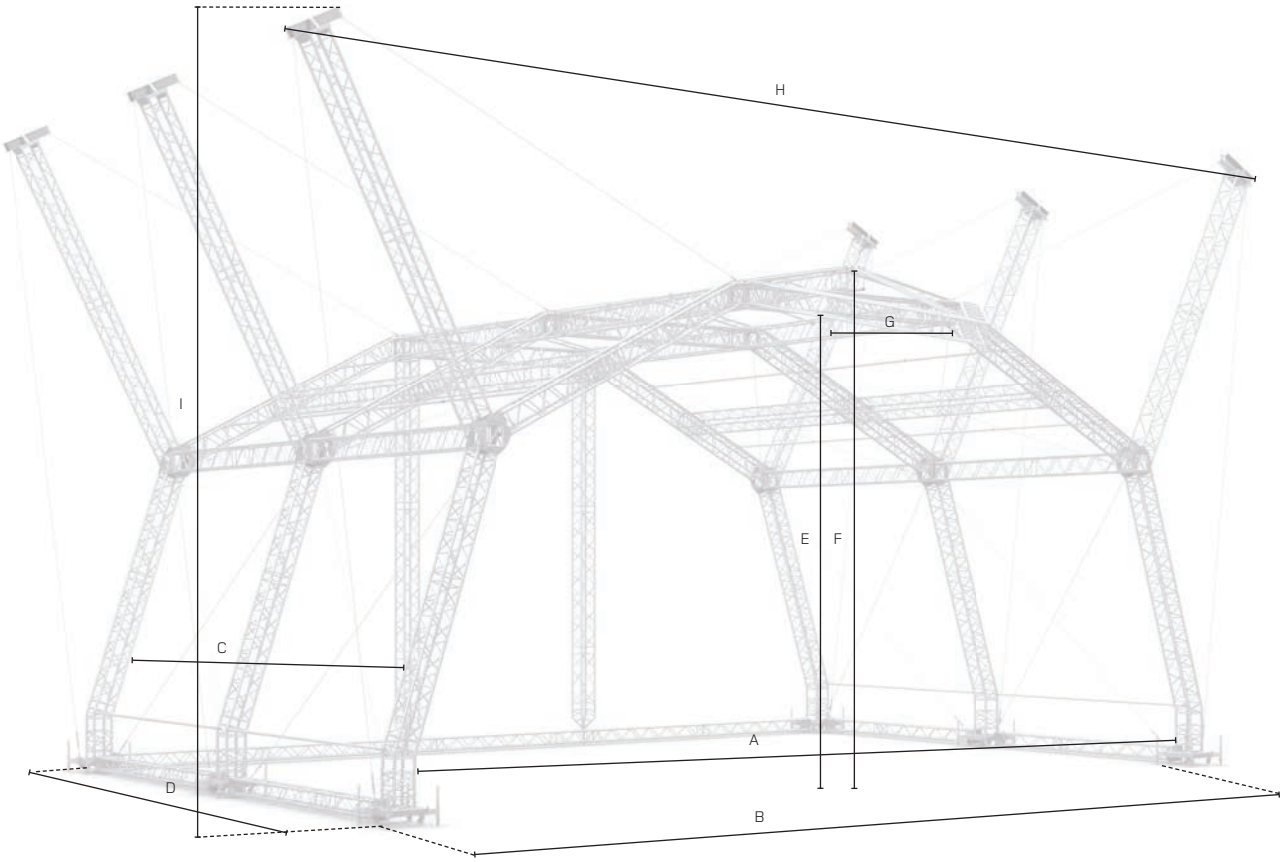

TECHNICAL SPECIFICATIONS

		Stage size ›	16x10 m	52.50x32.81 ft
Dimensions	A	Internal width	17.22 m	56.50 ft
	B	Overall external width	18.62 m	61.09 ft
	C	Internal depth	10.40 m	34.12 ft
	D	Overall external depth	11.80 m	38.71 ft
	E	Clearance	8.00 m	26.25 ft
	F	Overall height	8.86 m	29.07 ft
	G	Cantilever depth	3.17 m	10.40 ft
	H	Overall external width - TOP	21.30 m	69.88 ft
	I	Overall external height - TOP	11.84 m	38.85 ft

LOADING CAPACITY

		Stage size ›	16x10 m	52.50x32.81 ft
Loading capacity	Main grid	Uniformly distributed (UDL)	6000 kg	13216 lbs
	* See structural report for exact load positioning			

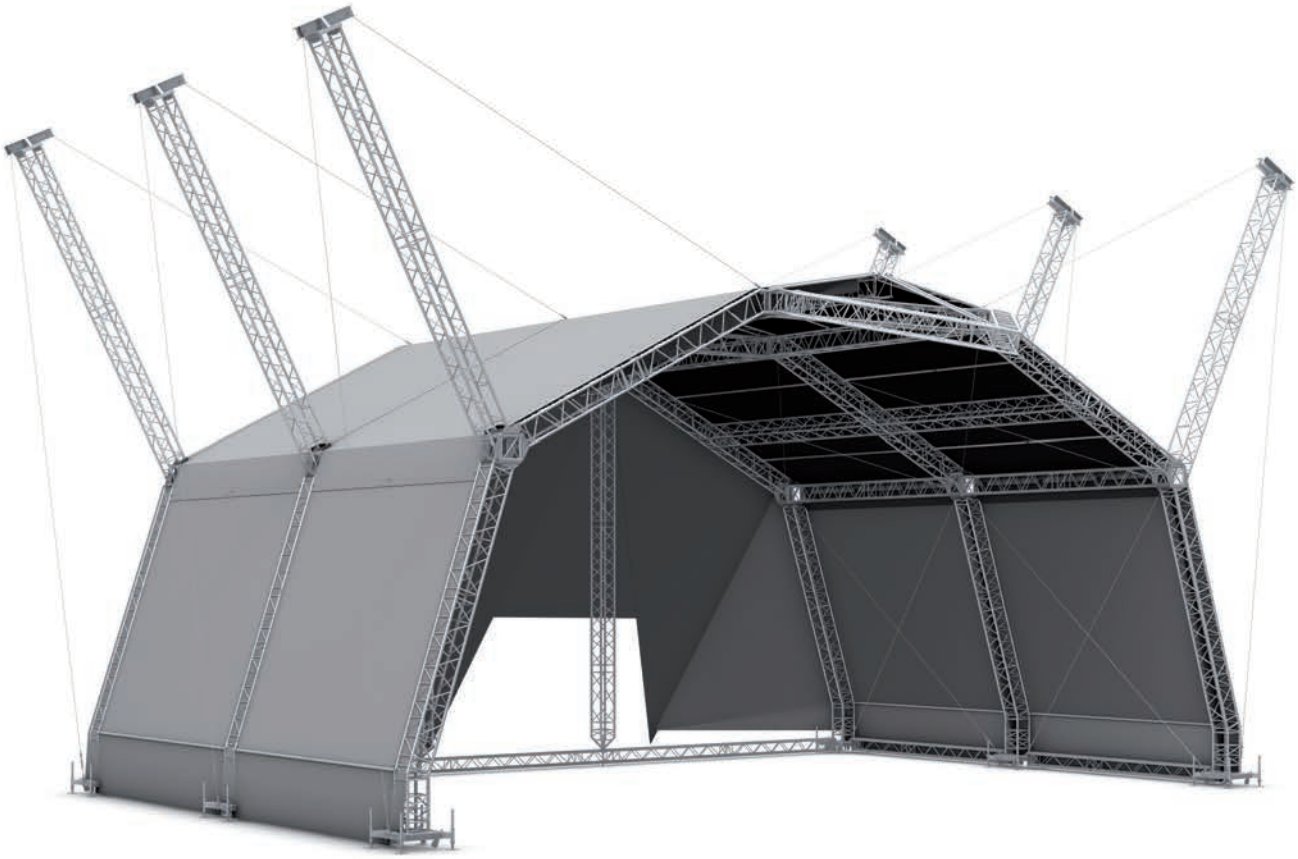

OPERATIONAL SPECIFICATIONS

Design standards	DIN EN 13814 (2005)	Fairground and amusement park machinery and structures
	DIN EN 1991 / Eurocode 1	Actions on structures
	DIN EN 1999 / Eurocode 9	Design of aluminium structures
	DIN EN 1993 / Eurocode 3	Design of steel structures
	• All of our structures are produced under EN 1090 EXC2 as standard and include the necessary guy wires, instruction manual and engineering report	
Wind management	In service	17.8m/s - 64km/h - 40mph (Max. gust wind speed)
	Out of service	28m/s - 100km/h - 62mph (Max. gust wind speed)
	* Full side wall coverage	
	* Training recommended	
Ballast	This can vary per column from 1800kg / 3694lbs up to 2813kg / 6196lbs and depends on:	
	• If towers are free standing or interconnected	
	• Layout of canopies	
	• Self-weight of load or interconnected stage is considered (Might be deducted from ballast under certain conditions)	
	• Friction material used between screw jacks, padding and sub soil	
Canopy & sidewalls	B1 fire retardant canopy on request	
	Silvergrey; other colors or inside black on request	
Customized	Customisation (i.e. truss configuration, alternative dimensions, roof adjustability) upon request	

TRANSPORTATION DATA

	Stage size ›	16x10 m	52.50x32.81 ft
Self-weight	* Exact self-weight depends on configuration	4990 kg	10991 lbs
Transport volume	* Packed in carton boxes and bubble foil	60 m^3	2119 ft^3

We've got you covered

FOH Front of House

- Double decker front of house structure for temporary events
- Two tier structure with integrated platform ideal for sound station
- Heavy-duty M290 Quatro main structure and with support beams
- Fast connection for quick, simple and secure assembly
- Structure supplied complete with PVC covers

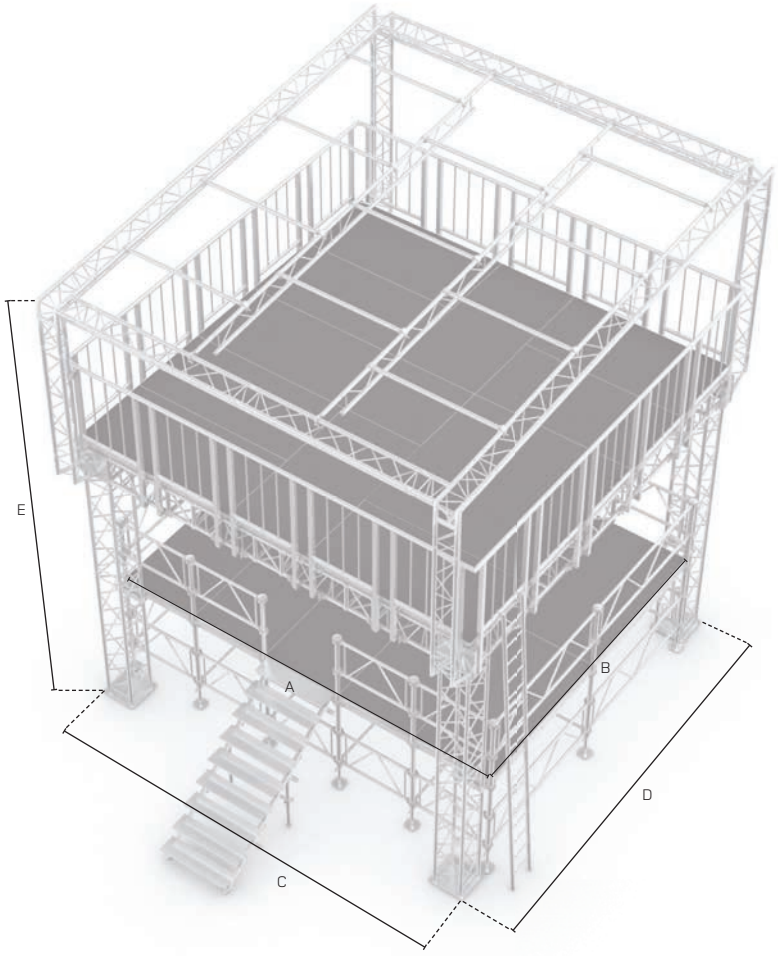

TECHNICAL SPECIFICATIONS

		Stage size ›	5x5 m	16.40x16.40 ft
Dimensions	A	Internal width	5.00 m	16.40 ft
	B	Internal depth	4.00 m	13.12 ft
	C	External width	5.00 m	16.40 ft
	D	External depth	5.00 m	16.40 ft
	E	Height back	6.18 m	20.27 ft
	F	Height front	6.57 m	21.56 ft

LOADING CAPACITY

		Stage size ›	5x5 m	16.40x16.40 ft
Loading capacity		Top level	200 kg/m²	4746.07 lbs
		Bottom level	750 kg/m²	17797.77 lbs
	* See structural report for exact load positioning			

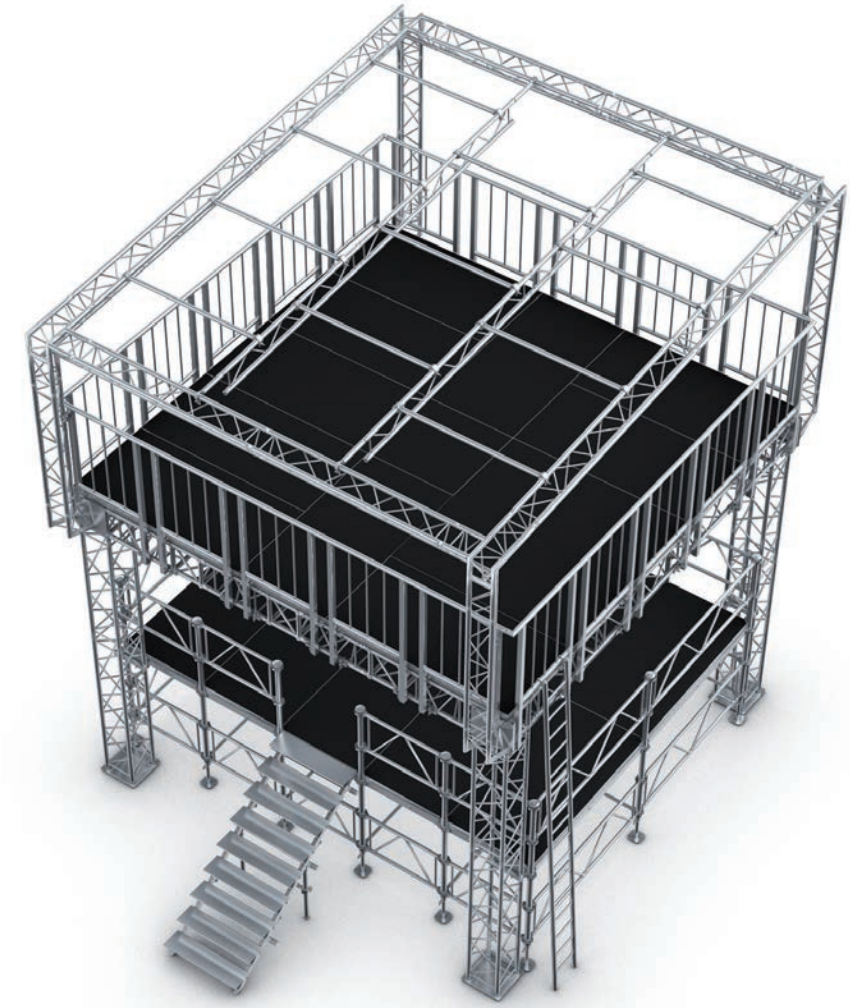

OPERATIONAL SPECIFICATIONS

Design standards	DIN 1055-4 Loading on structures DIN 4112 Temporary structures DIN 4113 Aluminium structures • All of our structures are produced under EN 1090 EXC2 as standard and include the necessary guy wires, instruction manual and engineering report
Wind management	In service 17.8m/s - 64km/h - 40mph (max. gust wind speed) Out of service 27.5m/s - 100km/h - 62mph (max. gust wind speed)
Ballast	This can vary per column from 250kg / 550 lbs up to 1500 kg / 3304 lbs and depends on: • Layout of canopies • Self-weight of load or interconnected stage is considered (Might be deducted from ballast under certain conditions) • Friction material used between screw jacks, padding and sub soil
Canopy & sidewalls	B1 fire-retardant canopy on request, single piece format Silvergrey; other colors or inside black on request B1 fire-retardant side nets in compliance with latest Eurocodes
Customized	Customisation (i.e. truss configuration, alternative dimensions) upon request

TRANSPORTATION DATA

	Stage size ›	5x5	19.7 x 19.7´
Self-weight	* Exact self-weight depends on configuration	2594 kg	5714 lbs
Transport volume	* Packed in carton boxes and bubble foil	20 m^3	176 ft^3

Milos. Works better.

Get set!

Rigging accessories

ARVO-LC 750daN

Get set!
Rigging accessories

- Steel wires with colored thimbles
- Milos workwear
- Turnbuckles
- All equipment tested / rated
- Secondary safety bonds for fixtures
- O-rings and shackles
- Adjustable chains & STAC chains
- Basic rigging tools
- Ballast solutions

O-RINGS	O-Ring
Rigging Acc.	Available for SWL up to 6 t (13227 lbs)
O-RING-3T	SWL 3t; Weight = 0.31 kg (0.68 lbs)
O-RING-5T	SWL 5t; Weight = 0.61 kg (1.34 lbs)

SHACKLES	Shackle
Rigging Acc.	Available for SWL up to 6.5 t (14330 lbs)
SHA-1.5T	SWL 1.5t; Weight = 0.20 kg (0.44 lbs)
SHA-2T	SWL 2t; Weight = 0.31 kg (0.68 lbs)
SHA-3.2T	SWL 3.25t; Weight = 0.61 kg (1.34 lbs)

DROPNET	Dropnet lock, cell 201 with emergency pin
Rigging Acc.	For quick release of your roof´s sidewall covering Weight = 0.65 kg (1.43 lbs)

TURNBUCKLES	various sizes & ends
Rigging Acc.	For tensioning wires. Available lengths:
TUR-3/4"X12"	Turnbuckle 304.8mm eye-fork; Weight = 4.30 kg (9.48 lbs)
TUR-3/4"X12"	Turnbuckle 304.8mm fork-fork; Weight = 4.30 kg (9.48 lbs)
TUR-5/8"X9"	Turnbuckle 229mm fork-fork; Weight = 2.30 kg (5.07 lbs)
TUR-5/8"X9"	Turnbuckle 229mm eye-fork; Weight = 2.30 kg (5.07 lbs)

PODGRIG	Podger
Rigging Acc.	Used for releasing of jammed truss connections. Ratchet head on one end. Weight = 0.6 kg (1.32 lbs)

STACCHAIN	STAC chain 1.5m length
Rigging Acc.	Used for adjusting lengths of guy wires. Weight = 4.67 kg (10.30 lbs)

BONDS	Safety ropes
Rigging Acc.	Available diameters: 3mm (0.09")
MSW10-5KG -600-BLACK	Safety wire l=600mm, capacity 5kg, black
MSW20-10KG -750	Safety wire l=750mm, capacity 10kg
MSW30-50KG -1000	Safety wire l=1000mm, capacity 50kg

STEELFLEX	Steel flex, 2t capacity, fire rating to 200 °C
Rigging Acc.	Available in more lengths
STE-F-1M	1m useful length; Weight = 1.00 kg (2.20 lbs)
STE-F-2M	2m useful length; Weight = 2.00 kg (4.40 lbs)
STE-F-3M	3m useful length; Weight = 3.00 kg (6.60 lbs)

ADJ-CH	Adjustable chain
Rigging Acc.	Available SWL up to 3.5t for use in adjustable applications Weight = 11.13 kg (24.54 lbs)

MIL-RAT	MILOS 25x1300mm ratchet strap
Rigging Acc.	25mm x 1300mm (1" x 51.2") Weight = 0.41 kg (0.90 lbs)

MIL-STR	MILOS 25x900mm tensioning strap
Rigging Acc.	25mm x 900mm (1" x 35.4") Weight = 0.06 kg (0.13 lbs)

RAT-1.5M	Ratchet strap
Rigging Acc.	Available in various lengths and tonnages Weight = 0.46 kg (1.01 lbs)

MAL-BIG	Big mallet
Rigging Acc.	Wooden shaft, metal head, replaceable plastic cap Weight = 0.94 kg (2.07 lbs)

MAL-SM	Small mallet
Rigging Acc.	Wooden shaft, metal head, replaceable plastic cap Weight = 0.46 kg (1.01 lbs)

HAM-750	Copper hammer
Rigging Acc.	Wooden shaft, 750g copper head Weight = 0.84 kg (1.85 lbs)

WT1-BS	Water tank for ballast 0.55t
Rigging Acc.	800 x 800 x 900 mm (2.62' x 2.62' x 2.95') provides 550 kg ballast can be stacked on each other using a reinforced stacking kit Weight = 45.00 kg (99.21 lbs)
WT1-BS	

TOO-LAN	Tool lanyard
Rigging Acc.	For safer attachment of tools when working at heights Weight = 0.4 kg (0.88 lbs)

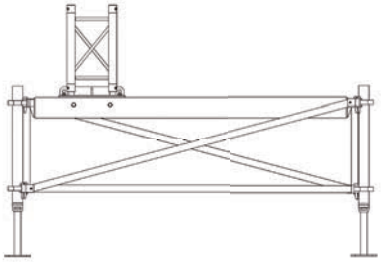

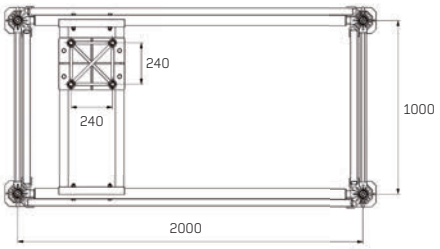

SAFE BALLASTS	Safe ballast systems
Rigging Acc.	Safe ballast enables anchoring a system`s towers directly onto the main stage. This makes the stage one huge, active counterweight to the external forces created by outdoor conditions. SB considerably decreases the necessity of additional ballasting. Safe ballast is available for systems both with MT1 towers and also for MT2 large scale roof systems.
BS-S4-MT1	
BS-S4-MT2	

MUL-TOOL	Rigger´s multitool
Rigging Acc.	Weight = 0.35 kg (0.77 lbs)

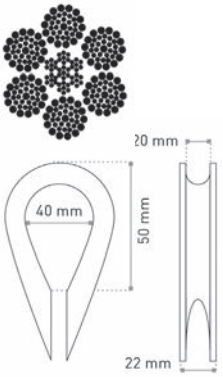

STEEL WIRE ROPES

	Length		Pure rope code		Rope with sheath code	
Thimble colour	m	ft	10mm rope (1 ton)	14mm rope (2 tons)	10mm rope (1 ton)	14mm rope (2 tons)
Orange	0.75	2.46	RGSW 1075	RGSW 2075	RGSWC 1075	RGSWC 2075
Red	1.50	4.92	RGSW 1150	RGSW 2150	RGSWC 1150	RGSWC 2150
Pink	2.00	6.56	RGSW 1200	RGSW 2200	-	-
White	3.00	9.84	RGSW 1300	RGSW 2300	RGSWC 1300	RGSWC 2300
Light blue	4.00	13.12	RGSW 1400	RGSW 2400	-	-
Blue	6.00	19.69	RGSW 1600	RGSW 2600	-	-
Yellow	9.00	29.53	RGSW 1900	RGSW 2900	-	-
Brown	10.00	32.81	RGSW 11000	RGSW 21000	-	-
Green	12.00	39.37	RGSW 11200	RGSW 21200	-	-

Note:
Thimbles are fixed to the ends of our steel wire ropes with Talurit-type conical ferrules; the ferrules are fitted by cold pressing in compliance with European standards EN 13411 and DIN 3093.
• The inspection hole on the ferrule is useful for tests and inspections by the rope manufacturer, but not necessarily for the end user (EN 13411-3). It is remotely possible for a rope to slip from a ferrule. Before this happens, however, the rope thimbles will have already become deformed. • Regular inspection of the thimble shape, together with rope stand tests, are an excellent guarantee of safety.

MW01	MILOS Waterproof jacket
Workwear	Available in M, L, XL sizes Weight = 0.59 kg (1.30 lbs)

MW02	MILOS Windstopper jacket
Workwear	Available in M, L, XL sizes Weight = 0.88 kg (1.94 lbs)

MW03	MILOS Polo shirt
Workwear	Available in M, L, XL sizes Weight = 0.24 kg (0.53 lbs)

MW05	MILOS Sweatshirt
Workwear	Available in M, L, XL sizes Weight = 0.64 kg (1.41 lbs)

MW07	MILOS T-shirt
Workwear	Available in M, L, XL sizes Weight = 0.23 kg (0.51 lbs)

MW08	MILOS canvas cap
Workwear	Weight = 0.08 kg (0.18 lbs)

MW10	MILOS working gloves - with rubber palm
Workwear	Weight = 0.05 kg (0.11 lbs)

MW11	MILOS winter hat
Workwear	Weight = 0.04 kg (0.09 lbs)

MW12	Bump cap with LED lights
Workwear	Bump cap with 4 bright led lights Weight = 0.26 kg (0.57 lbs)

Back off!

Crowd barriers

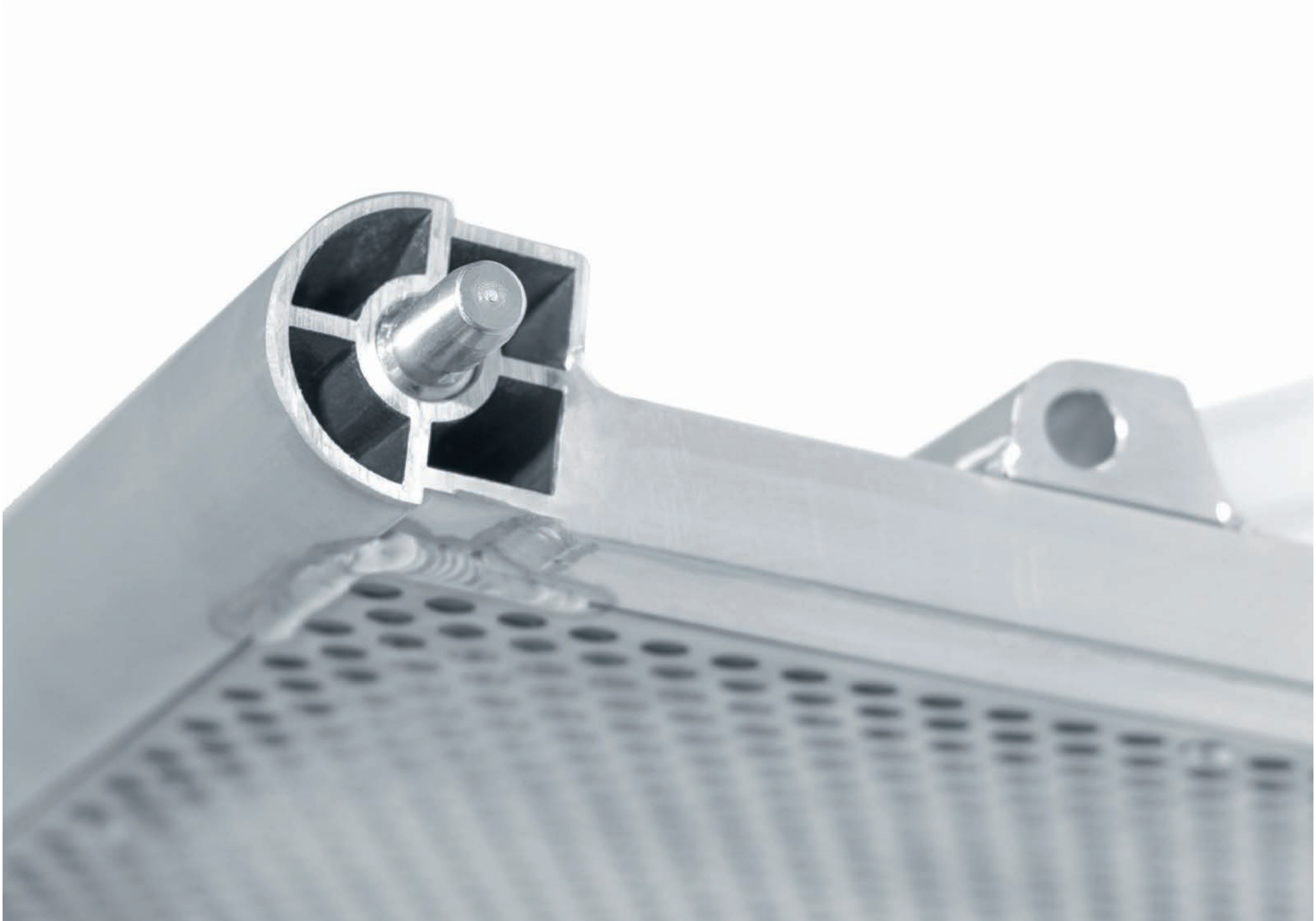

Milos. Works better.

Back off!
Crowd barriers

- Modular aluminium crowd barrier series
- Rigid construction compliant to the highest safety standards
- Vibration-free hinges for reduced volume storage
- 3-point locking with simple one bolt fits all assembly
- Special designed hinges for quick & easy set-up
- Range of standard & special modules
- Made of EN AW 6082-T6 aluminium alloy
- Barriers come with one set of connection material
- "Finger safe" perforated sheet with ∅ = 8 mm holes

CWB-B	Crowd barrier-1m standard unit
Weight	
41.2 kg	
90.83 lbs	

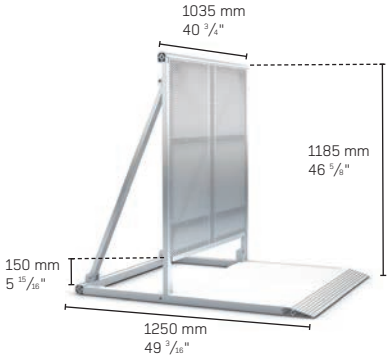

CWB-BC	Crowd barrier-1m cable cross
Weight	opening for cable acces
37.2 kg	
82.01 lbs	

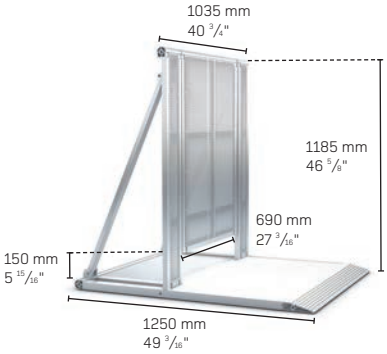

CWB-DC	Crowd barrier-Gate access
Weight	equipped with lockable door
50.1 kg	
110.45 lbs	

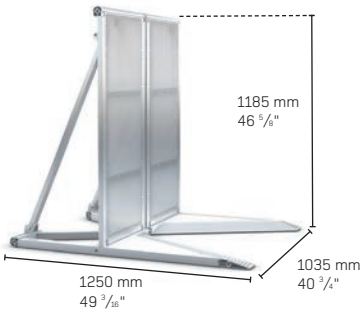

CWB-VC	Crowd barrier-Variable corner
Weight	adjustable from 120° to 240°
36.4 kg	
82.25 lbs	

CWB-V-CART	Crowd barrier-Cart
Weight	carries up to 10 barriers
50.30 kg	wheels with brakes
110.87 lbs	

CWB-FC	Connection set
Weight	set of bolts
0.50 kg	
1.00 lbs	

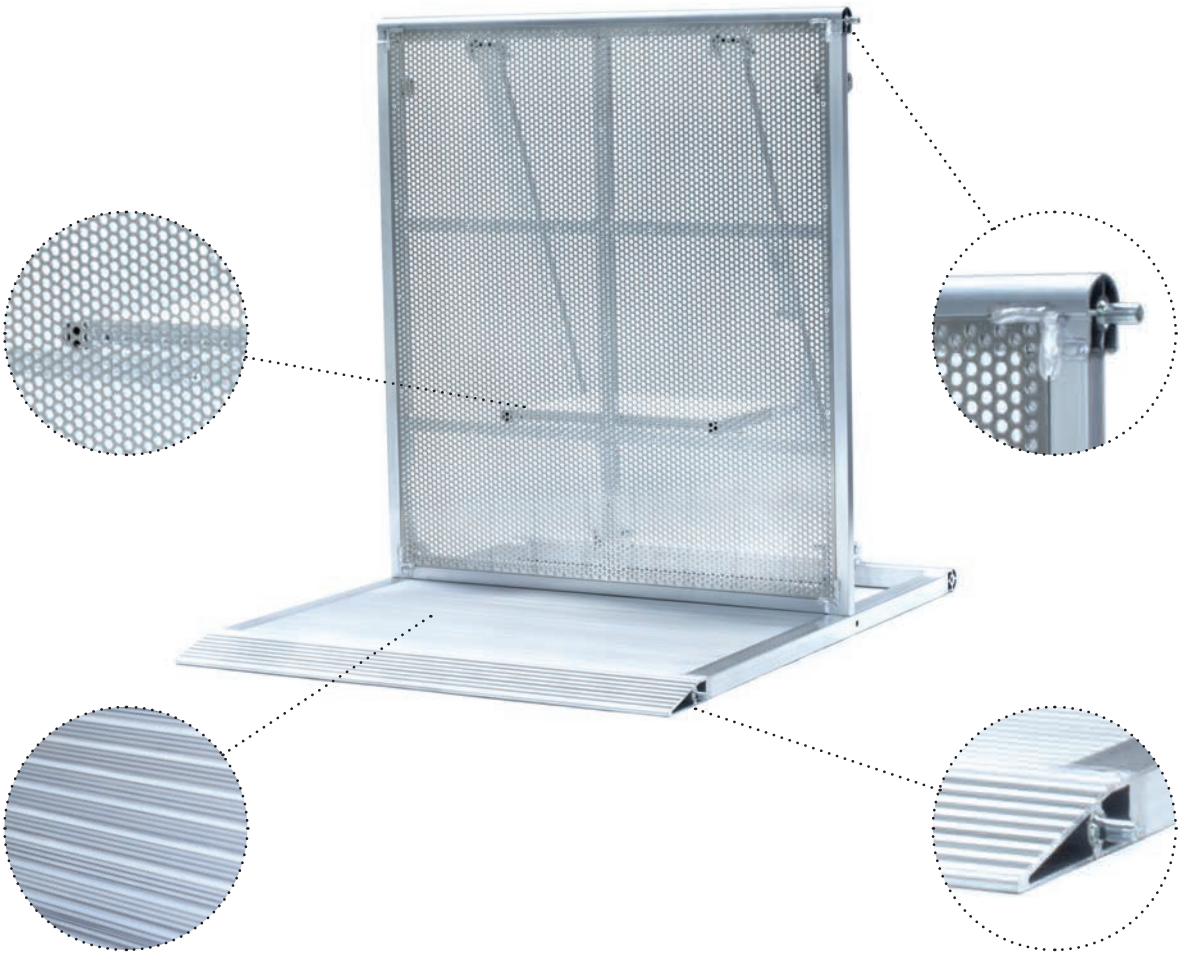

Our crowd barriers are tested under the following specifications:
300kg/m² horizontal load applied on the upper horizontal chord of vertical wall • 750kg/m² vertical load (representing crowd weight) on the main bottom platform • Structural report is calculated in accordance with EN 1991-1-1, EN 1993-1-1, EN 1999-1-1 and EN 13200-3.

Rock-solid

Xstages

Rock-solid
Xstage S1

- Adjustable scissor stage platform ideal for semi-permanent installations
- Variable height adjustment via integrated cable brake system
- Low profile design with loading up to 750 Kg/m²
- Indoor and outdoor surface finish options available
- TUV approved

XSTAGE S1	Anti-slip plywood (outdoor use), deck colour may vary due to use of natural plywood, fenol coated					SPECIFICATIONS CHART	
code	deck size	height options	max. UDL	top deck	total weight	storage height	deck material
XS1LAT	2000x1000 mm	400 - 600 - 800 - 1000 mm	750 kg / m²	22 mm	63.00 kg	200 mm	Indoor plywood
	78.74 x 39.37"	15.75 - 23.62 - 31.50 - 39.37"	153.60 lbs / ft²	0.87"	138.90 lbs	7.87"	
XS1PLY	2000x1000 mm	400 - 600 - 800 - 1000 mm	750 kg / m²	21 mm	66.30 kg	200 mm	Outdoor plywood
	78.74 x 39.37"	15.75 - 23.62 - 31.50 - 39.37"	153.60 lbs / ft²	0.83"	138.90 lbs	7.87"	

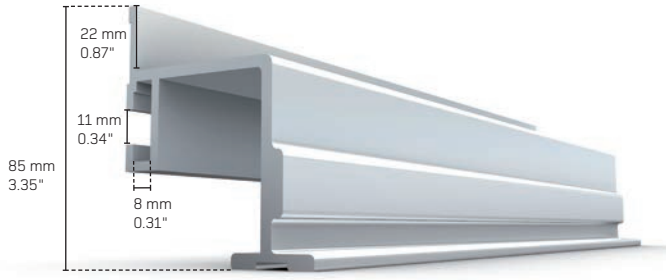

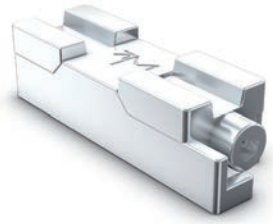

XS1PROFILE	S1 aluminium profile
Series	High-tensile aluminium profile
XS1LAT XS1PLY	Weight = 2.23 kg/m (0.68 lbs/ft)

XS1 CONNECTOR	Xstage connector for XS1/XS8 series
Series	Connecting element using M5 allen bolt
XS1LAT XS1PLY	Weight = 0.06 kg (0.13 lbs)

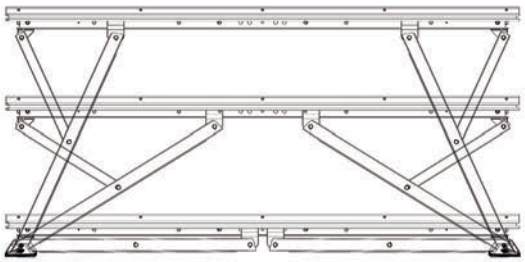

XS1	Stage connection using XS1CONNECTOR
Series	
XS1LAT	
XS1PLY	

XS1	Folding mechanism
Series	Adjustable height from 400, 600, 800, 1000mm . (15.75 - 23.62 - 31.50 - 39.37")
XS1LAT	
XS1PLY	

Rock-solid
Xstage S8 & S8 Light

- Lightweight platform stage system
- Quick lock leg pocket mechanism for fast & secure assembly
- Low profile design with loading up to 750 Kg/m²
- Indoor and outdoor surface finish options available
- Low weight, super strong
- TUV approved
- Universal edge connection

XSTAGE S8	Antislip plywood (outdoor use), deck colour may vary due to use of natural plywood, fenol coated					SPECIFICATIONS CHART	
code	deck size	height options	max. UDL*	top deck	total weight	storage height	deck material
XS8PLY	2000x1000 mm	200 - 1500 mm	750 kg / m²	22 mm	38.00 kg	200.00 mm	Outdoor plywood
	78.74 x 39.37"	7.87 - 59.06"	153.60 lbs / ft²	0.87"	83.76 lbs	7.87"	
XS8COM	2000x1000 mm	200 - 1500 mm	750 kg / m²	22 mm	28.00 kg	200.00 mm	Composite
	78.74 x 39.37"	7.87 - 59.06"	153.60 lbs / ft²	0.87"	61.72 lbs	7.87"	
XS8PLX	2000x1000 mm	200 - 1500 mm	750 kg / m²	22 mm	58.00 kg	200.00 mm	Plexiglass
	78.74 x 39.37"	7.87 - 59.06"	153.60 lbs / ft²	0.87"	127.84 lbs	7.87"	
XS8LTG	2000x1000 mm	200 - 1500 mm	750 kg / m²	22 mm	36.00 kg	200.00 mm	Outdoor plywood (light version)
	78.74 x 39.37"	7.87 - 59.06"	153.60 lbs / ft²	0.87"	79.35 lbs	7.87"	

*Legs are sold separately

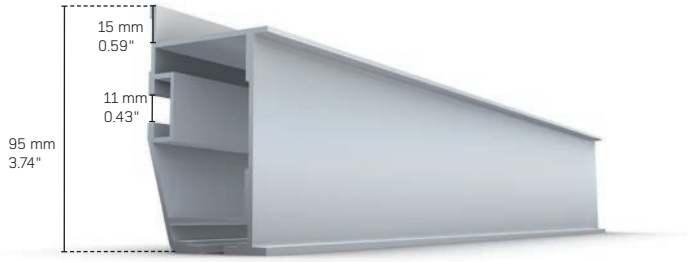

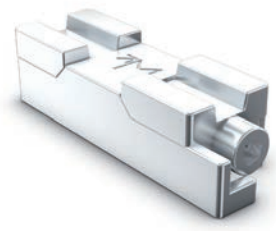

XS8PROFILE	S1 aluminium profile
Series	High-tensile aluminium profile
XS8PLY XS8COM XS8PLX XS8LTG	Weight = 2.04 kg/m (0.62 lbs/ft)

XS1 CONNECTOR	Xstage connector for XS1/XS8 series
Series	Connecting element using M5 allen bolt
XS8PLY XS8COM XS8PLX	Weight = 0.06 kg (0.13 lbs)

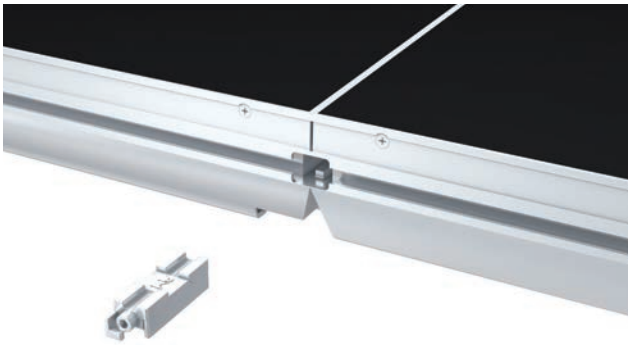

XS8	Stage connection for S8
Series	S8 regular staging gets connected via QUICK-CONN
XS8PLY XS8COM XS8PLX	

XS8	Stage connection for S8-Light
Series	Deck frame features built-in PVC clips
XS8LTG	

XS8PLX	S8 plexiglass top deck
Series	Transparent surface, various colours available on request

XS8PLY	S8 plywood surface
Series	Anti-slip plywood for outdoor use. Special shapes available Color of plywood deck may vary, fenol coated

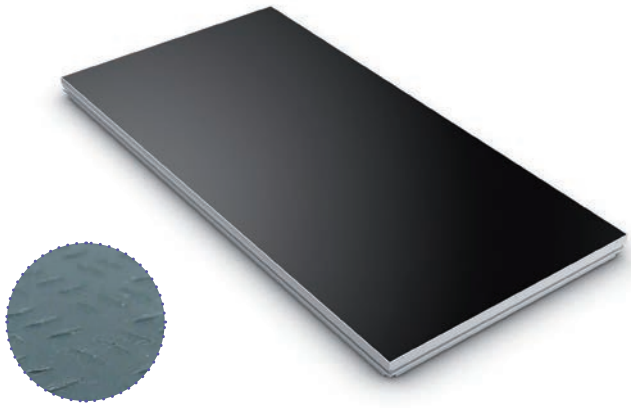

XS8COM	Composite
Series	Honeycomb composite - antislip, more durable, stronger, much lighter, keeps same color

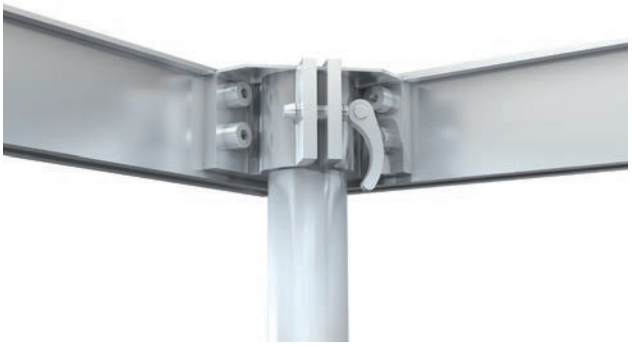

XS8	S8 plug-in leg system
Series	Locks in 48x3mm pipe leg (1 7/8" x 1/8")
XS8PLY XS8COM XS8PLX XS8LTG	

XS8-LEG	Aluminium leg, plastic end cap
Series	Range of stage heights available 200-1000mm (7.87 - 39.37") 48 x 3 mm leg diameter (1 7/8" x 1/8") Weight = 1.10 kg/m (0.33 lbs/ft)
XS8PLY	
XS8COM	
XS8PLX	
XS8LGT	

XS8ADJ-LEG	Aluminium leg, adjustable 50 mm (1.96") bolt
Series	Range of stage heights available 200-1500mm (7.87 - 59.06") 48 x 3 mm leg diameter (1 7/8" x 1/8") Weight = 1.40 kg/m (0.45 lbs/ft)
XS8PLY	
XS8COM	
XS8PLX	
XS8LGT	

XS8T-LEG	Aluminium leg, telescopic, adjustable 50 mm (1.96") bolt
Series	Range of stage heights available 500-1500mm (- 59.06") 48 x 3 mm leg diameter (1 7/8" x 1/8") Weight = 1.88 kg/m (0.61 lbs/ft)
XS8PLY	
XS8COM	
XS8PLX	
XS8LGT	

XS8	S8 2x1m
Series	Plywood = 38 kg (83.75 lbs) Composite = 28 kg (61.71 lbs) Plexi = 58 kg (127.83 lbs)
XS8PLY|2X1M	
XS8COM|2X1M	
XS8PLX|2X1M	

XS8	S8 2x0.5m
Series	Plywood = 26 kg (57.30 lbs) Composite = 19 kg (41.88 lbs) Plexi = 50 kg (110.20 lbs)
XS8PLY|2X0.5M	
XS8COM|2X0.5M	
XS8PLX|2X0.5M	

XS8	S8 1x1m
Series	Plywood = 26 kg (57.30 lbs) Composite = 19 kg (41.88 lbs) Plexi = 50 kg (110.20 lbs)
XS8PLY|1X1M	
XS8COM|1X1M	
XS8PLX|1X1M	

XS8	S8 1x0.5m
Series	Plywood = 20 kg (44.08 lbs) Composite = 17 kg (37.47 lbs) Plexi = 30 kg (66.12 lbs)
XS8PLY|1X0.5M	
XS8COM|1X0.5M	
XS8PLX|1X0.5M	

XS8	S8 2x1m triangle
Series	Plywood = 28 kg (55.10 lbs) Composite = 18 kg (39.67 lbs) Plexi = 38 kg (83.75 lbs)
XS8PLY|TRI004 XS8COM|TRI004 XS8PLX|TRI004	

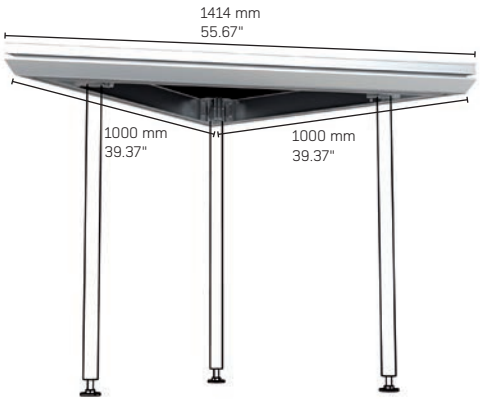

XS8	S8 1x1m triangle
Series	Plywood = 26 kg (57.30 lbs) Composite = 19 kg (41.88 lbs) Plexi = 50 kg (110.20 lbs)
XS8PLY|TRI006 XS8COM|TRI006 XS8PLX|TRI006	

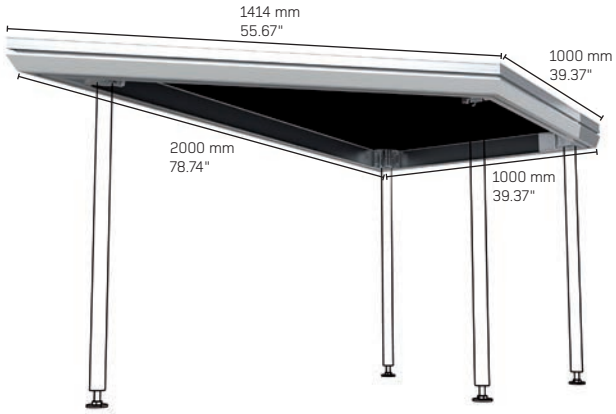

XS8	S8 2x1 trapezoid
Series	Plywood = 25 kg (55.10 lbs) Composite = 18 kg (39.67 lbs) Plexi = 38 kg (83.75 lbs)
XS8PLY|TRA010 XS8COM|TRA010 XS8PLX|TRA010	

XS8	S8 circle table 1/4 circle r=1m (39.37")
Series	Plywood = 26 kg (57.30 lbs) Composite = 18 kg (41.88 lbs) Plexi = 50 kg (110.20 lbs)
XS8PLY|CRS001 XS8COM|CRS001 XS8PLX|CRS001	

Milos. Works better.

Rock-solid
Xstage Accessories

- Guard rails
- Connection accessories
- Xstage connectors
- Xstage dollies & transport carts
- Xstage stairs & steps

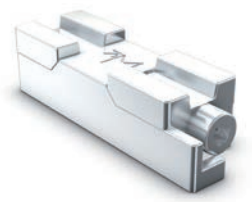

XS1CONNECTOR	Xstage connector for XS1/XS8 series
Series	Connecting element using a M5 allen bolt
XS1	
XS8	Weight = 0.06 kg (0.13 lbs)

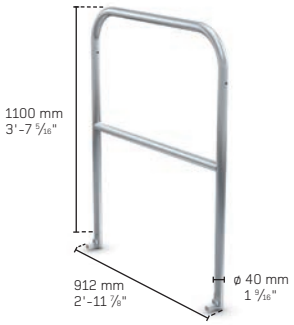

XS1GR|1000	1000mm guard rail for S1
Series	Including attachment connectors
XS1	Weight = 4.60 kg (10.14 lbs)

XS8GR|1000	1000mm guard rail for S8
Series	Including attachment connectors
XS8	Weight = 4.60 kg (10.14 lbs)

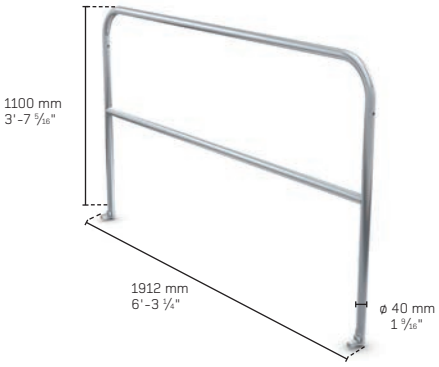

XS1GR|2000	2000mm guard rail for S1
Series	Including attachment connectors
XS1	Weight = 6.50 kg (14.32 lbs)

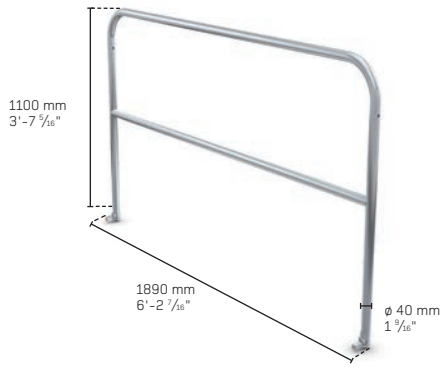

XS8GR|2000	2000mm guard rail for S8
Series	Including attachment connectors
XS8	Weight = 6.50 kg (14.32 lbs)

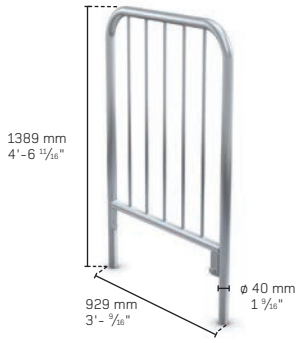

XS1GRH|1000	1000mm guard rail HD for S1
Series	Including attachment connectors
XS1	Weight = 6.90 kg (15.21 lbs)

XS8GRH|1000	1000mm guard rail HD for S8
Series	Including attachment connectors
XS8	Weight = 6.90 kg (15.21 lbs)

XS1GRH|2000	2000mm guard rail HD for S1
Series	Including attachment connectors
XS1	Weight = 9.50 kg (20.94 lbs)

XS8GRH|2000	2000mm guard rail HD for S8
Series	Including attachment connectors
XS8	Weight = 9.50 kg (20.94 lbs)

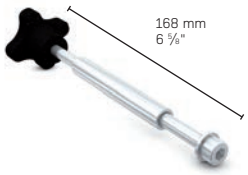

XS1GRC| STRAIGHT	Guard rail connector for S1
Series	For connection of neighbouring guard rails
XS1	Weight = 0.25 kg (0.55 lbs)

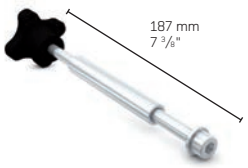

XS8GRC| STRAIGHT	Guard rail connector for S8
Series	For connection of neighbouring guard rails
XS8	Weight = 0.25 kg (0.55 lbs)

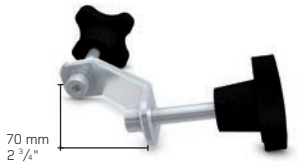

XS1GRC| CORNER	Guard rail corner connector for S1
Series	
XS1	Weight = 0.25 kg (0.55 lbs)

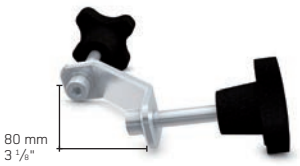

XS8GRC| CORNER	Guard rail corner connector for S8
Series	For connection of neighbouring guard rails in the corner
XS8	Weight = 0.25 kg (0.55 lbs)

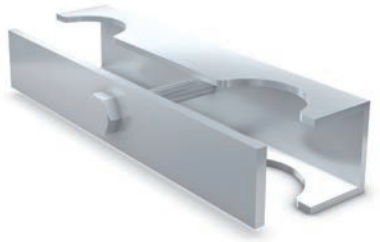

XS8LEGC|2LEGS	Connector for legs/2 for S8
Series	
XS8	Weight = 1.00 kg (2.20 lbs)

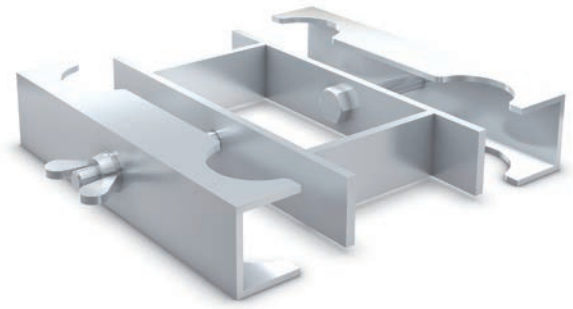

XS8LEGC|4LEGS	Connector for legs/4 for S8
Series	
XS8	Weight = 2.3 kg (5.07 lbs)

XS1CHAIRSTOP |1000	1m of chair (flip) stop for S1/S8
Series	
XS1 XS8	Weight = 1 kg (2.20 lbs)

XS8CART-V	Al transport cart – vertical position
Series	Holds up to 6 pcs of S1 and 10 pcs of S8
XS1 XS8	Weight = 37.46 kg (81.55 lbs)

XS8CART-H	Transport cart – horizontal position
Series	Holds up to pcs 5 stages for S1/S8/S8
XS1 XS8	Weight = 58.00 kg (127.83 lbs)

XS1STAIRS-ADJ| 600-1000	Adjustable 600 – 1000mm stairs (23.62"-39.37")
Series	Includes guard rails
XS1 XS8	Weight = 35.00 kg (77.14 lbs)

XS1STAIRS-ADJ| 1000-1500	Adjustable 1000 – 1500mm stairs (39.37"-59.06")
Series	Includes guard rails
XS1 XS8	Weight = 46.00 kg (101.38 lbs)

XS1 STAIRS| STEEL	Stairs up to 1000mm-metal profile with wood
Series	Wooden steps for S1/S8/S8 Each step 20cm, guard rails on request Weight = 42.00 kg (92.57 lbs)
XS1 XS8	

XS8LTG	Stone M10 for S1/S8
Series	connection element equipped with positioning pins; used for fitting guard rails & staircases Weight = 0.04 kg (0.09 lbs)
XS1 XS8	

XS8LTGC	Plastic connector for XS8LTG
Series	Weight = 0.02 kg (0.05 lbs)
S8	

Rush and setup
Xstage S4

- Versatile node platform stage system
- Extended heights and multi-tier platforms possible using standard parts
- Tapered wedge brace connection for a rigid, tolerance-free assembly
- Indoor and outdoor surface finish options available

XSTAGE S4	Antislip plywood (outdoor use), deck colour may vary due to use of natural plywood, fenol coated					SPECIFICATIONS CHART	
code	deck size	height options	max. UDL*	top deck	total weight	storage height	deck material
XS4PLY	2000x1000 mm	1000 - 2500 mm	750 kg / m²	22 mm	38.00 kg	200 mm	Outdoor plywood
	78.74 x 39.37"	39.37 - 98.43"	153.60 lbs / ft²	0.87"	83.76 lbs	7.87"	
XS4PLX	2000x1000 mm	1000 - 2500 mm	750 kg / m²	22 mm	58.00 kg	200 mm	Plexiglass
	78.74 x 39.37"	39.37 - 98.43"	153.60 lbs / ft²	0.87"	127.84 lbs	7.87"	

*UDL depends on brace distribution

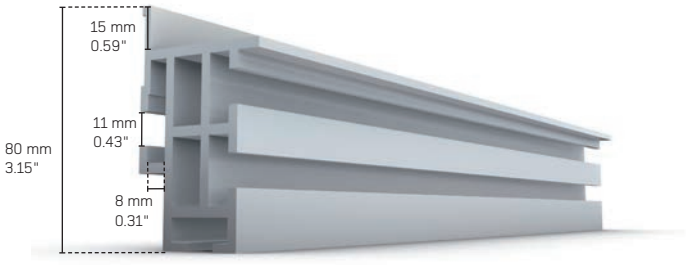

XS4PROFILE	S4 aluminium profile
Series	High-tensile aluminium profile
XS4	Weight = 2.23 kg/m (0.68 lbs/ft)

XS4	Connecting element for S4 stage
Series	Octagonal ring for wedge locking
XS4	Weight = 0.28 kg (0.62 lbs)

XS4PLX	S4 plexiglass top deck
Series	Transparent surface, various colours available on request
XS4	

XS4PLY	S4 plywood surface & composite
Series	Anti-slip plywood for outdoor use.
XS4	

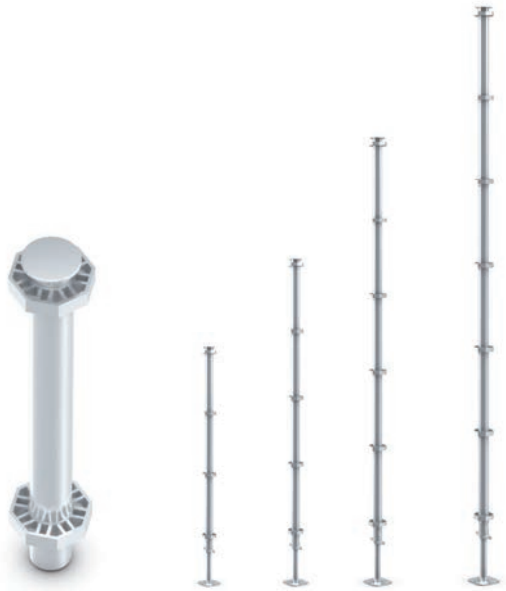

XS4LEG-GR	S4 adjustable leg system 500 mm (19.67")
Series	Guard rail legs available from 2000 – 3500 mm (78.74" - 137.80"). 500mm (19.68") module Weight = 1.89 kg (4.01 lbs)
XS4	

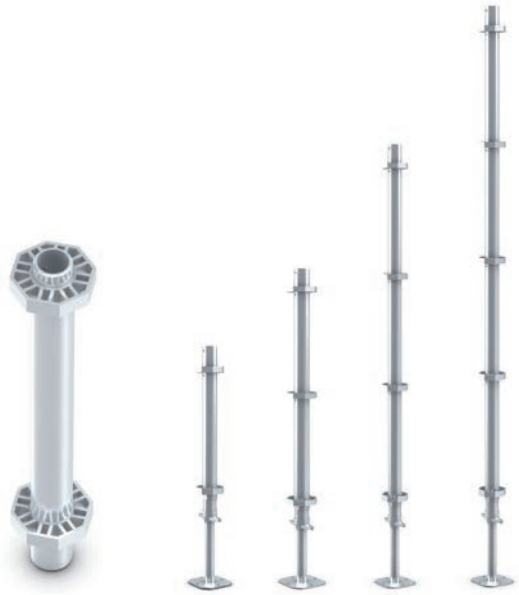

XS4LEG	S4 adjustable leg system 500 mm (19.67")
Series	Legs available from 1000 – 2500 mm (39.37" - 98.43"). 500mm (19.68") module Weight = 1.89 kg (3.99 lbs)
XS4	

XS4LEG-FOOT	S4 adjustable foot
Series	For stage levelling up to 400mm (15.75") height Weight = 1.60 kg (3.53 lbs)

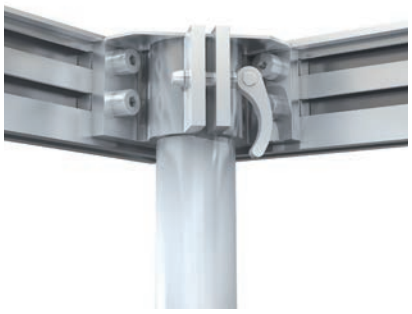

XS4	S4 Plug-in leg system-OPTIONAL USE
Series	S4 deck also utilizes regular pipe-leg collars for versatile usage with 48 x 3 mm (1.89" x 0.12")

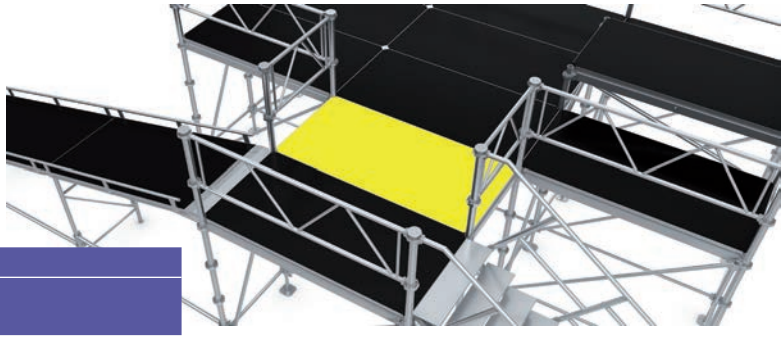

XS4PLY|2x1m	Xstage S4 for outdoor use 2x1m
Series	
	Weight = 40.62 kg (89.53 lbs)

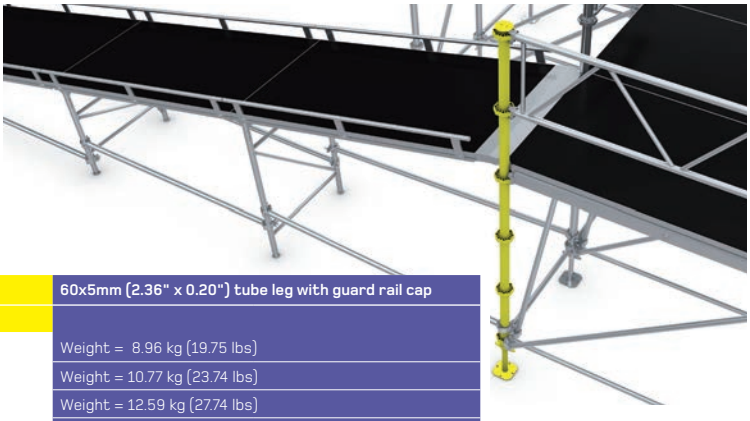

XS4LEG-GR	60x5mm (2.36" x 0.20") tube leg with guard rail cap
Series	
XS4LEG-GR|2000	Weight = 8.96 kg (19.75 lbs)
XS4LEG-GR|2500	Weight = 10.77 kg (23.74 lbs)
XS4LEG-GR|3000	Weight = 12.59 kg (27.74 lbs)
XS4LEG-GR|3500	Weight = 14.41 kg (31.76 lbs)

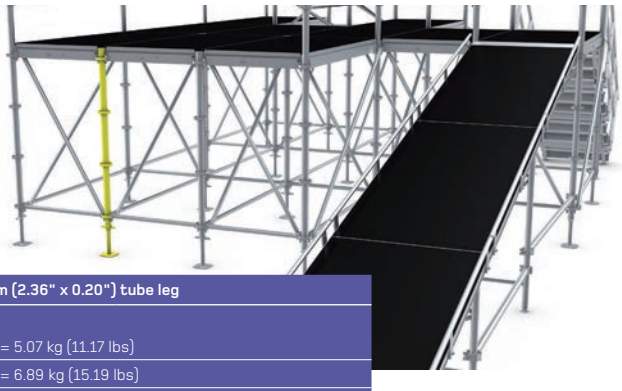

XS4LEG	60x5mm (2.36" x 0.20") tube leg
Series	
XS4LEG-D|1000	Weight = 5.07 kg (11.17 lbs)
XS4LEG-D|1500	Weight = 6.89 kg (15.19 lbs)
XS4LEG-D|2000	Weight = 8.70 kg (19.17 lbs)
XS4LEG-D|2500	Weight = 10.51 kg (23.16 lbs)

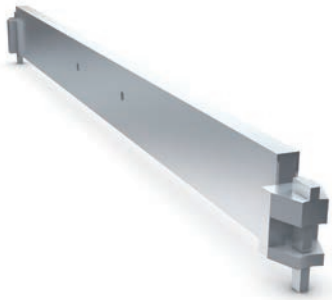

XS4GIRDER|1000	S4 girder 1000mm (39.37")
Series	
XS4	Weight = 1.38 kg (3.04 lbs)

XS4GIRDER|2000	S4 girder 2000mm (78.74")	
Series		
XS4		Weight = 2.88 kg (6.34 lbs)

XS4BRACE-B|1000	S4 brace 1000mm (39.37") straight	
Series	40x2 tube (1.57"x 0.08")	
XS4		Weight = 0.97 kg (2.14 lbs)

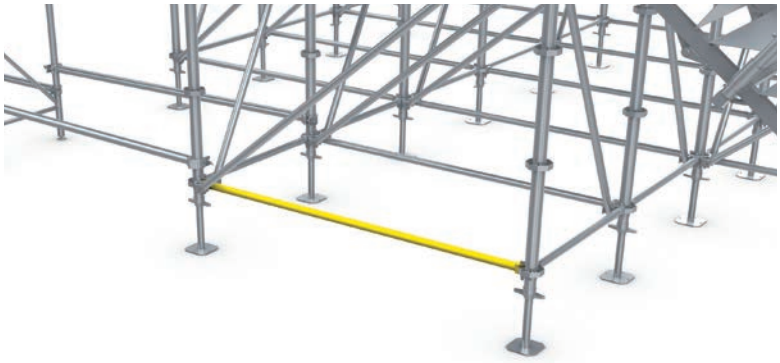

XS4BRACE-B|2000	S4 brace 2000mm (78.74") straight	
Series	tube 40x2mm (1.57"x 0.08")	
XS4		Weight = 1.61 kg (3.55 lbs)

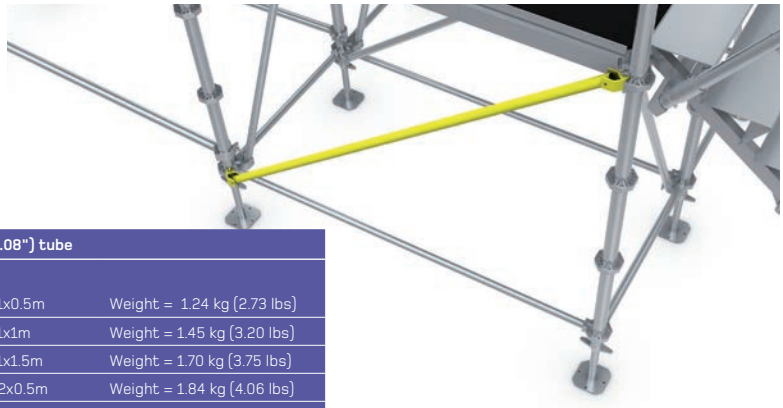

XS4BRACE	sloping brace; 40x2mm (1.57"x 0.08") tube	
Series		
XS4BRACE-D|1000x500	S4 sloping brace 1000 for fields 1x0.5m	Weight = 1.24 kg (2.73 lbs)
XS4BRACE-D|1000x1000	S4 sloping brace 1000 for fields 1x1m	Weight = 1.45 kg (3.20 lbs)
XS4BRACE-D|1000x1500	S4 sloping brace 1000 for fields 1x1.5m	Weight = 1.70 kg (3.75 lbs)
XS4BRACE-D|2000x500	S4 sloping brace 2000 for fields 2x0.5m	Weight = 1.84 kg (4.06 lbs)
XS4BRACE-D|2000x1000	S4 sloping brace 2000 for fields 2x1m	Weight = 1.96 kg (4.32 lbs)
XS4BRACE-D|2000x1500	S4 sloping brace 2000 for fields 2x1.5m	Weight = 2.14 kg (4.71 lbs)

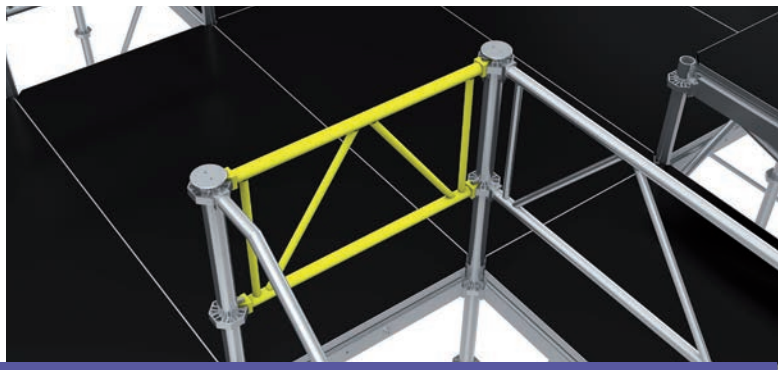

XS4GR|1000	**S4 guard rail 1000mm (39.37")**	
Series	40x2mm tube (1.57"x 0.08")	
XS4		Weight = 3.60 kg (7.93 lbs)

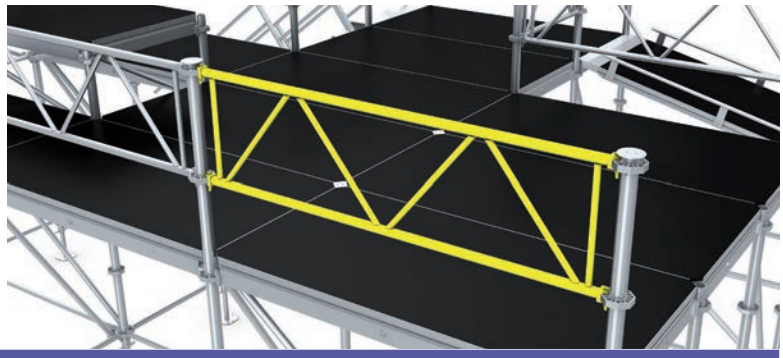

XS4GR|2000	**S4 guard rail 2000mm (78.74")**	
Series	40x2mm tube (1.57"x 0.08")	
XS4		Weight = 6.19 kg (13.64 lbs)

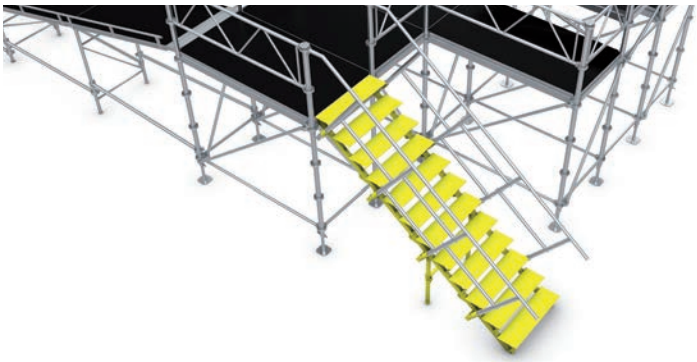

XS4STAIRS	**Staircase for S4**		
Series	**XS4STAIRS-T**	S4 stairs-top	Weight = 20.64 kg (45.49 lbs)
XS4	**XS4STAIRS-M**	S4 stairs-middle	Weight = 20.89 kg (46.04 lbs)
	XS4STAIRS-B	S4 stairs-bottom	Weight = 20.64 kg (45.49 lbs)

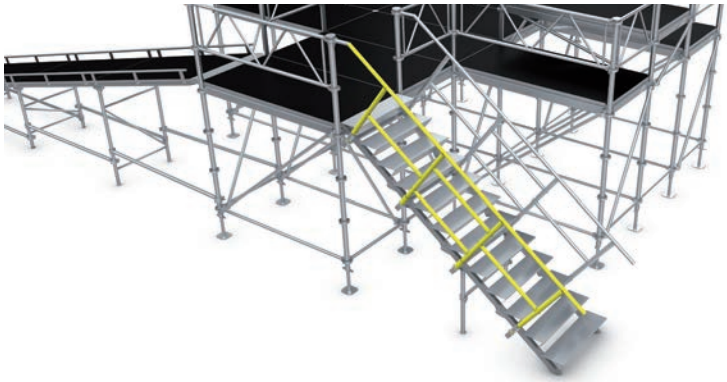

XS4STAIRS-GR	**Guard rail for S4 staircase**		40x2mm tube (1.57"x 0.08")
Series	**XS4STAIRS-GR STAIRS-T**	S4 guard rail-top (one piece)	Weight = 7.20 kg (15.87 lbs)
XS4	**XS4STAIRS-GR STAIRS-M**	S4 guard rail-middle (one piece)	Weight = 5.00 kg (11.02 lbs)
	XS4STAIRS-GR STAIRS-B	S4 guard rail-bottom (one piece)	Weight = 4.26 kg (9.39 lbs)

S4-RAMP	**S4 loading ramp 8m (26.25´), height up to 2 m (6.56´)**
Series	consists of 4 S8 modules, includes braces and off-drive railing
XS4	Weight = 230.23 kg (507.43 lbs)

XS4PIN	**S4 pin (wedge)**
Series	connecting element
XS4	Weight = 0.10 kg (0.22 lbs)

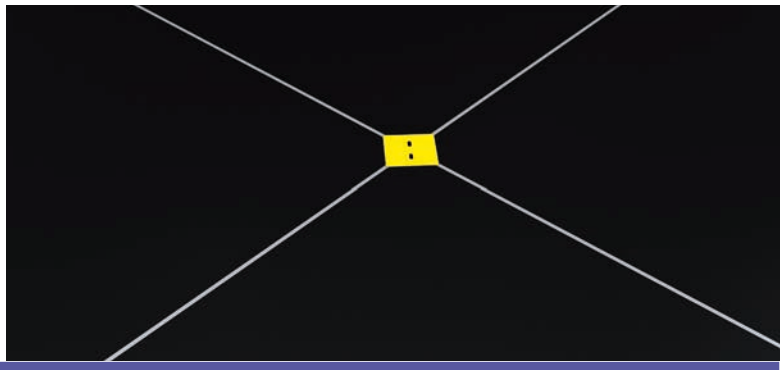

XS4LEG-CAP	**S4 guard rail leg cap**
Series	
XS4	Weight = 0.09 kg (0.19 lbs)

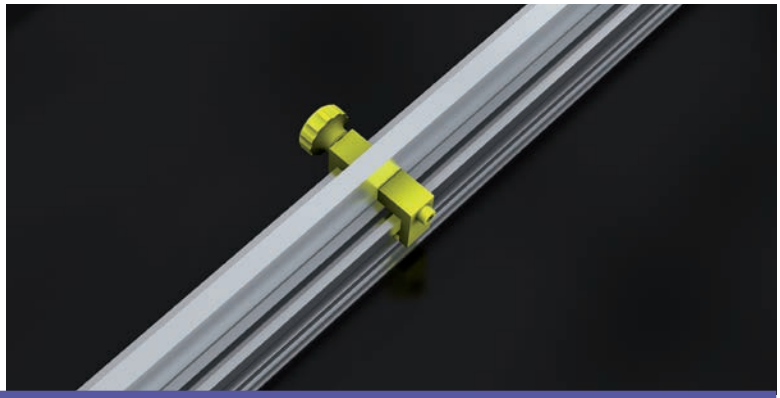

XS4C|INNER	**S4 inner connector**
Series	For connecting two stage modules together
XS4	Weight = 0.31 kg (0.68 lbs)

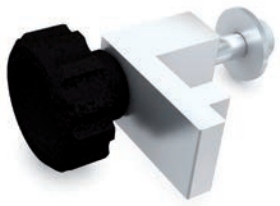

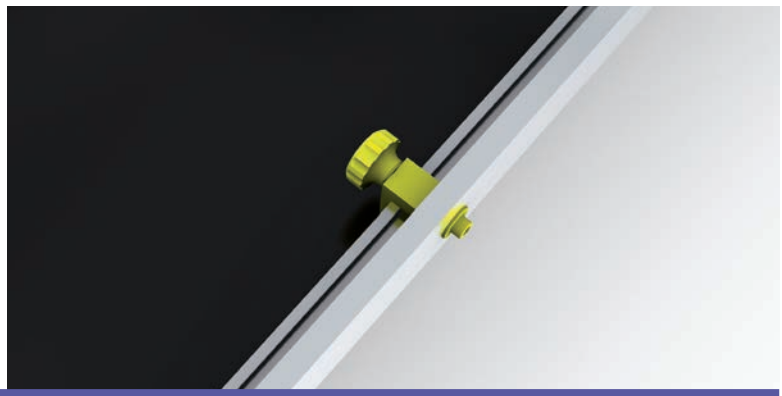

XS4C|OUTER	**S4 outer connector**
Series	For connecting two stage modules together
XS4	Weight = 0.20 kg (0.44 lbs)

XS4LEG-COVER|STEEL	**S4 guard rail leg cap**
Series	
XS4	Weight = 0.45 kg (0.99 lbs)

XS4LEG-KEY	**S4 key for tightening leg cap**
Series	
XS4	Weight = 0.09 kg (0.19 lbs)

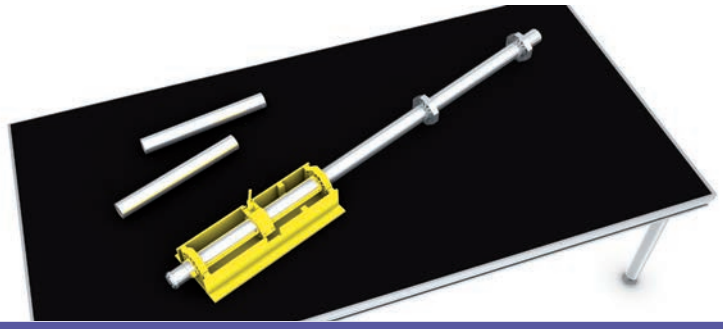

XS4LEG-TOOL	**S4 leg mounting bracket for quick leg release**
Series	
XS4	Weight = 8.00 kg (17.63 lbs)

Portable, lightweight, universal

Ramps

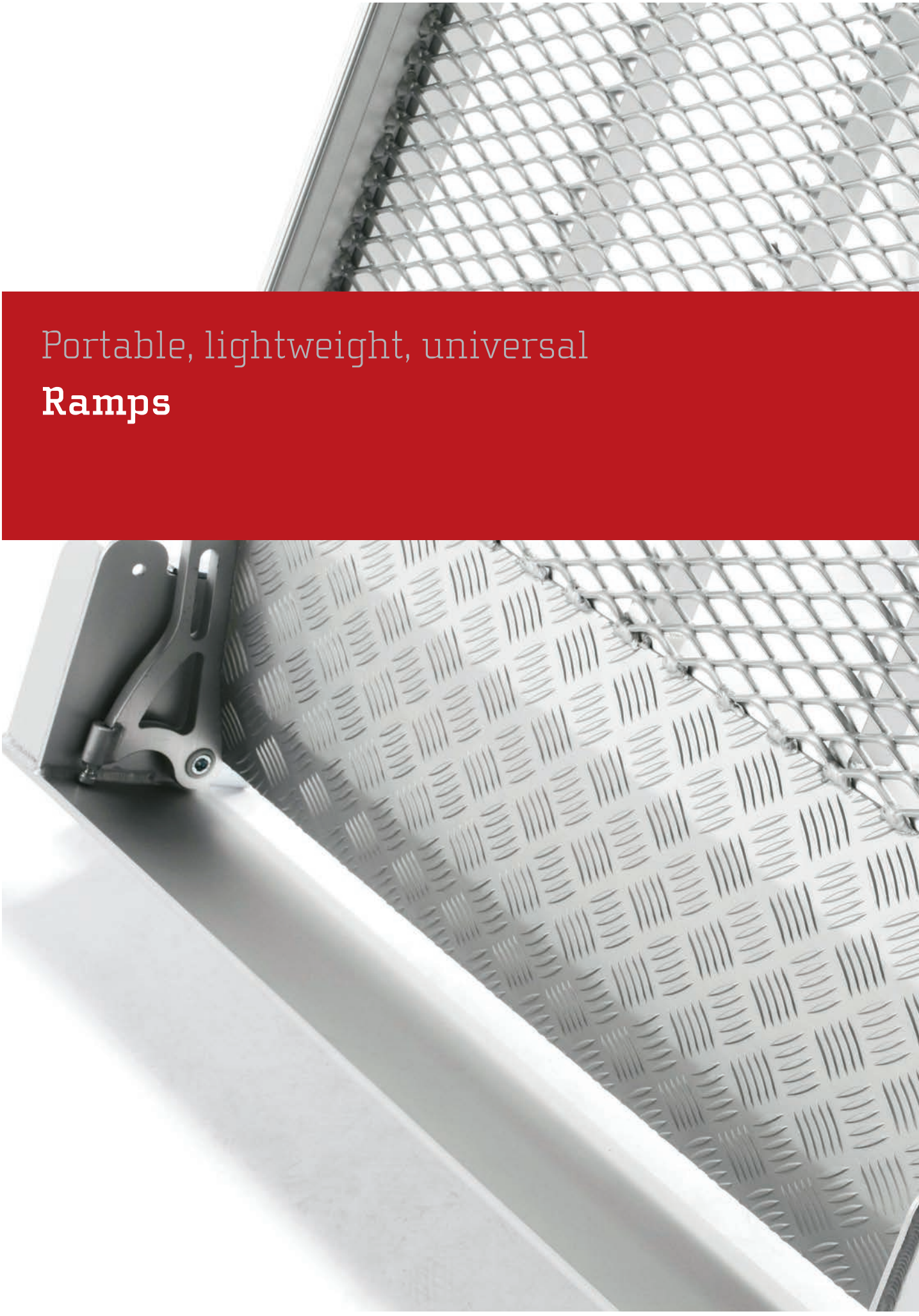

Easy Access

OV10, 11, 12, 13
Telescopic and foldable ramps

- Lightweight, telescopic and foldable loading ramp series
- Loading capacity up to 500 kg (1102 lbs)
- Maximum extended length up to 2900 mm (114.17")
- Anodized anti-slip surface
- Quick & simple operation

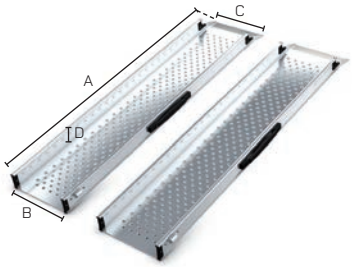

OV10 TELESCOPIC RAMPS			TECHNICAL SPECIFICATIONS															
Code	Description	Electric wheelchair use	Minimum length		Maximum length A		Internal width B		External width C		Side height D		Recommended height (13°)		Loading capacity (SWL*) pair		Weight per piece	
			mm	inch	mm	inch	mm	inch	mm	inch	mm	inch	mm	inch	kg	lbs	kg	lbs
OV10E-1-1180	Ramp - 1 piece	No	1180	46.46	1180	46.46	210	8.27	236	9.29	60	2.36	200	7.87	500	1102.10	3.4	7.49
OV10E-2-2040	Telescopic ramp - 2 pieces	No	1180	46.46	2040	80.31	190	7.48	236	9.29	60	2.36	400	15.75	320	705.34	6.4	14.11
OV10E-3-2900	Telescopic ramp - 3 pieces	No	1180	46.46	2900	114.17	170	6.69	236	9.29	60	2.36	600	23.62	260	573.09	9.0	19.84

*SWL calculated for 500mm wheelbase

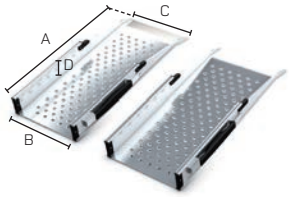

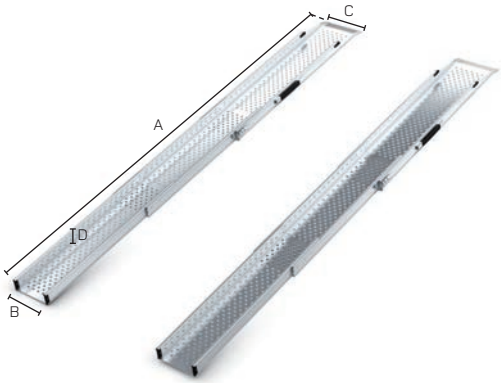

OV11 TELESCOPIC RAMPS			TECHNICAL SPECIFICATIONS															
Code	Description	Electric wheelchair use	Minimum length		Maximum length A		Internal width B		External width C		Side height D		Recommended height (13°)		Loading capacity (SWL*) pair		Weight per piece	
			mm	inch	mm	inch	mm	inch	mm	inch	mm	inch	mm	inch	kg	lbs	kg	lbs
OV11E-1-550	Ramp - 1 piece	Yes	550	21.65	550	21.65	210	8.27	236	9.29	60	2.36	100	3.941	540	1190.27	1.6	3.53
OV11E-1-1150	Ramp - 1 piece	Yes	1150	45.28	1150	45.28	210	8.27	236	9.29	60	2.36	200	7.87	500	1102.10	3.5	7.71
OV11E-2-1840	Telescopic ramp - 2 pieces	Yes	1150	45.28	1840	72.44	190	7.48	236	9.29	60	2.36	400	15.75	360	793.51	6.5	14.33
OV11E-3-2530	Telescopic ramp - 3 pieces	Yes	1150	45.28	2530	99.61	170	6.69	236	9.29	60	2.36	600	23.62	280	617.18	8.7	19.18

*SWL calculated for 500mm wheelbase

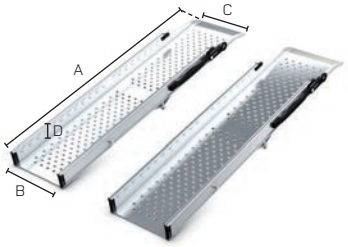

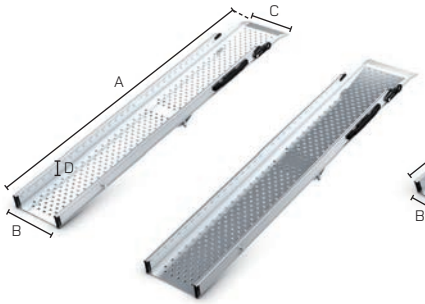

OV12 FOLDABLE RAMPS			TECHNICAL SPECIFICATIONS															
Code	Description	Electric wheelchair use	Minimum length		Maximum length A		Internal width B		External width C		Side height D		Recommended height (13°)		Loading capacity (SWL*) pair		Weight per piece	
			mm	inch	mm	inch	mm	inch	mm	inch	mm	inch	mm	inch	kg	lbs	kg	lbs
OV12E-1100	Foldable - 2 pieces	Yes	550	21.65	1100	43.31	210	8.27	236	9.29	60	2.36	200	7.87	440	969.85	4.3	9.48
OV12E-1540	Foldable - 2 pieces	Yes	770	30.31	1540	60.63	210	8.27	236	9.29	60	2.36	300	11.81	400	881.68	5.3	11.68
OV12E-2300	Foldable - 2 pieces	Yes	1150	45.28	2300	90.55	210	8.27	236	9.29	60	2.36	500	19.69	300	661.26	7.8	17.19

*SWL calculated for 500mm wheelbase

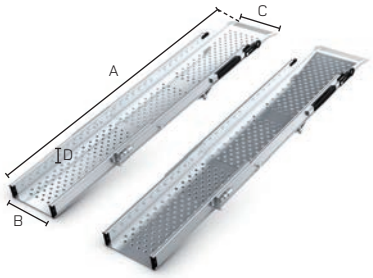

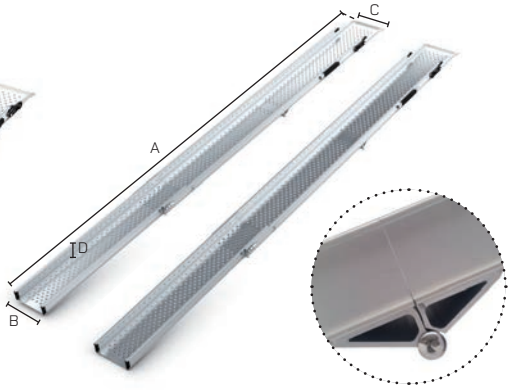

OV13 FOLDABLE TELESCOPIC RAMPS			TECHNICAL SPECIFICATIONS															
Code	Description	Electric wheelchair use	Minimum length		Maximum length A		Internal width B		External width C		Side height D		Recommended height (13°)		Loading capacity (SWL*) pair		Weight per piece	
			mm	inch	mm	inch	mm	inch	mm	inch	mm	inch	mm	inch	kg	lbs	kg	lbs
OV13E-1440	Foldable and telescopic - 3 pieces	Yes	550	21.65	1440	56.69	190	7.48	236	9.29	60	2.36	300	11.81	400	881.68	5.6	12.34
OV13E-2100	Foldable and telescopic - 3 pieces	Yes	770	30.31	2100	82.68	190	7.48	236	9.29	60	2.36	500	19.69	320	705.34	7.8	17.19
OV13E-3240	Foldable and telescopic - 3 pieces	Yes	1150	45.28	3240	127.56	190	7.48	236	9.29	60	2.36	800	31.50	220	484.92	11.0	24.25

*SWL calculated for 500mm wheelbase

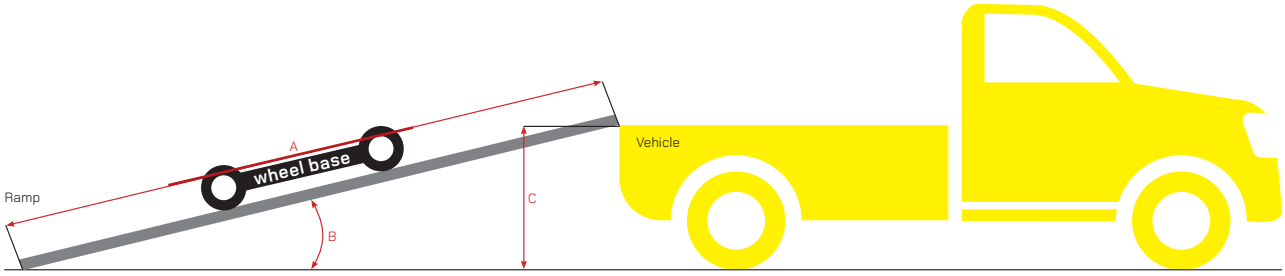

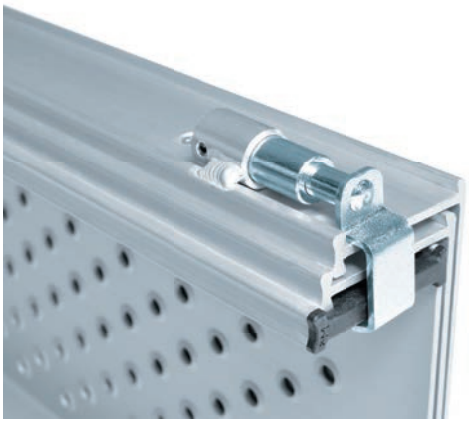

OV10,11,13	Smart locking system
Series	Spring loaded pin with zinc-chrome plated hook to secure the telescopic ramp

OV10,11,12,13	Comfort handling bar
Series	Ergonomic handling bar for easy manipulation

Regular cut
OV10

Chamfered cut
OV11, 12, 13

OV10,11,12,13	Regular or chamfered cuts
Series	Regular cut design for manual wheelchair use. chamfered cut design for electric (low profile) wheelchair use

OV10,11,12,13	Friction and scratch protective rubber pad
Series	Available for both regular and chamfered (low profile wheel) cut designs

Change the width and length

OV14 ramps

- Lightweight loading ramp series
- Loading capacity SWL 280 kg (617.20 lbs) for 500 mm wheelbase (19.68")
- Maximum length up to 2530 mm (99.61")
- Anodized anti-slip surface
- Quick & simple operation

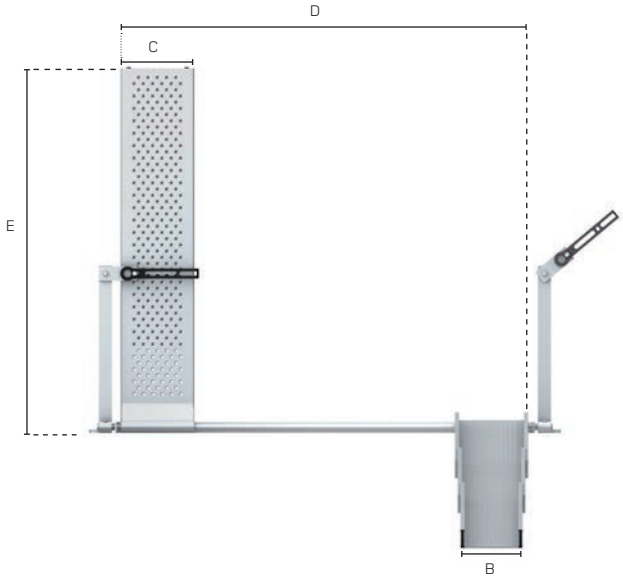

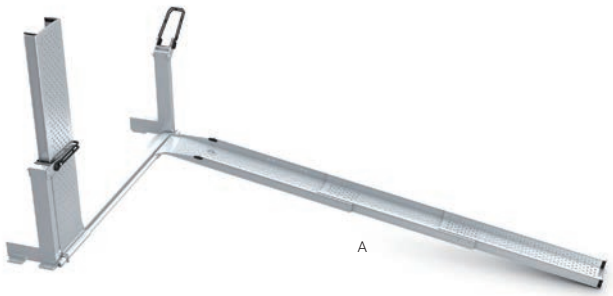

OV14 RAMPS		TECHNICAL SPECIFICATIONS													
Code	Description	Length A		Ramp internal width B		Ramp external width C		Max adjustable overall width D		Height folded E		Mounting height F		Weight	
		mm	inch	mm	inch	mm	inch	mm	inch	mm	inch	mm	inch	kg	lbs
OV14	Fixed adjustable telescopic ramp	2550	100.39	170	6.69	236	9.29	1200	47.24	1178	46.38	450 (11°) 600 (15°)	17.72 23.62	36	79.35

OV14	Telescopic design
Series	Retractable design for easy handling and compact storage

OV14	Positioning hinge bar
Series	Adjustable positioning of the ramp within hinge bar, chamfered design for electric wheelchair use.

Portable, lightweight, universal
RA01 folding ramps

- Simple use
- Anodized
- Lightweight
- Loading capacity of SWL 400 kg (881.68 lbs) for 500 mm wheelbase (19.68")
- Length up to 2740mm (107.87")
- 600mm, 800mm, 1000mm widths (23.62", 31.50", 39.37")
- Anti-slip surface

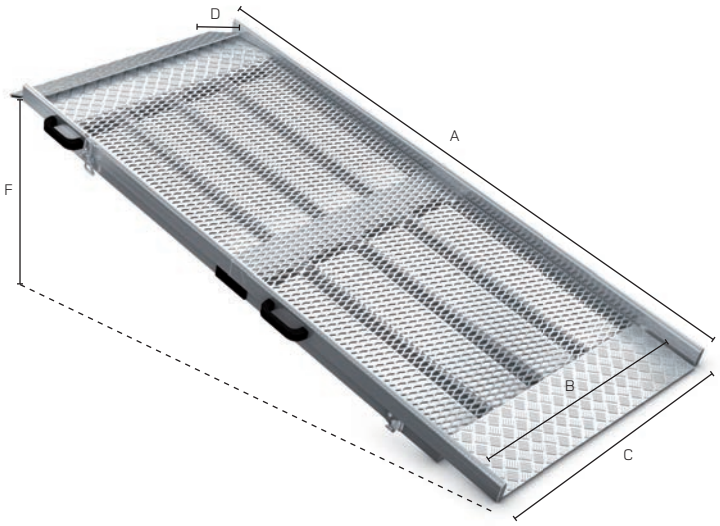

RA01 RAMPS		TECHNICAL SPECIFICATIONS													
Code	Description	Length A		Internal width B		External width C		Mounting depth D		Height folded E		Mounting height F min and max usable sloping angle		Weight	
		mm	inch	mm	inch	mm	inch	mm	inch	mm	inch	mm	inch	kg	lbs
RA01-450x600	Folding and compact	2243	88.31	600	23.62	685	26.97	100	3.94	1180	46.46	380(11°) 800(22°)	14.94 (11°) 31.50 (22°)	21	46.29
RA01-405x800	Folding and compact	2023	79.65	800	31.50	885	34.84	100	3.94	1070	42.13	350 (11°) 750 (23°)	13.78 (11°) 29.53 (23°)	21	46.29
RA01-450x800	Folding and compact	2243	88.31	800	31.50	885	34.84	100	3.94	1180	46.46	380 (11°) 800 (22°)	14.96 (11°) 31.50 (22°)	23	50.70
RA01-550x800	Folding and compact	2743	107.99	800	31.50	885	34.84	100	3.94	1430	56.30	470 (11°) 900 (20°)	18.50 (11°) 35.43 (20°)	28	61.72
RA01-550x1000	Folding and compact	2743	107.99	1000	39.37	1085	42.72	100	3.94	1430	56.30	470 (11°) 900 (20°)	18.50 (11°) 35.43 (20°)	32	70.53

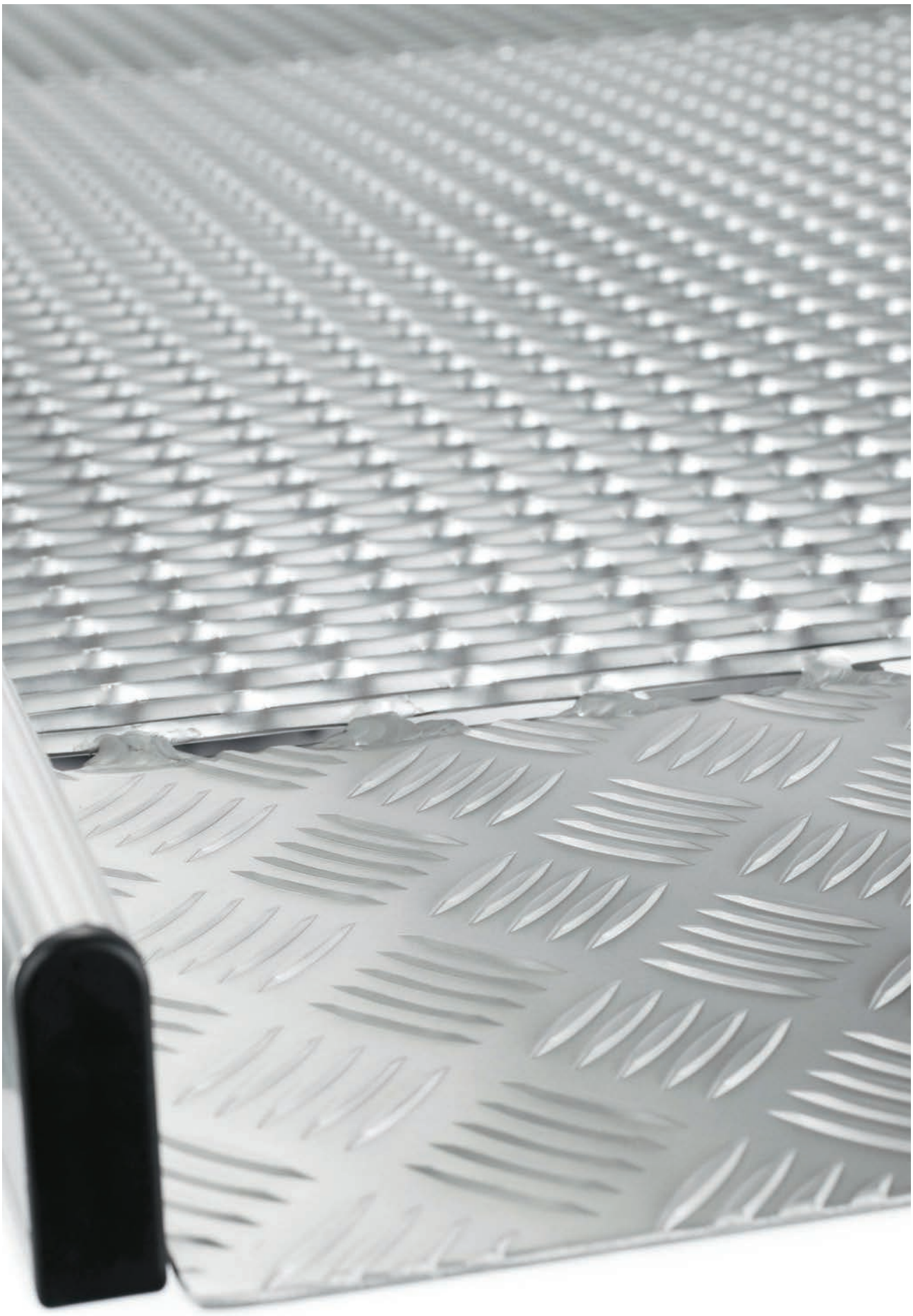

Portable, lightweight, universal
RA10, 11, 12, 20, 30, 40
Healthcare ramps

- Folding vehicle access ramp solution
- Designed for safe wheelchair access
- Loading capacity up to 400 Kg (881.7 lbs) for 500 mm wheelbase
- Maximum extended length up to 3240 mm (127.56")
- Anodized anti-slip surface
- Quick & simple operation
- Gas strut for easy handling
- Optional safety belts
- Optional turning adapter for 10/11/12/20 types
- Front and side crash test at 20G
- Conformity with EN 1789/A2

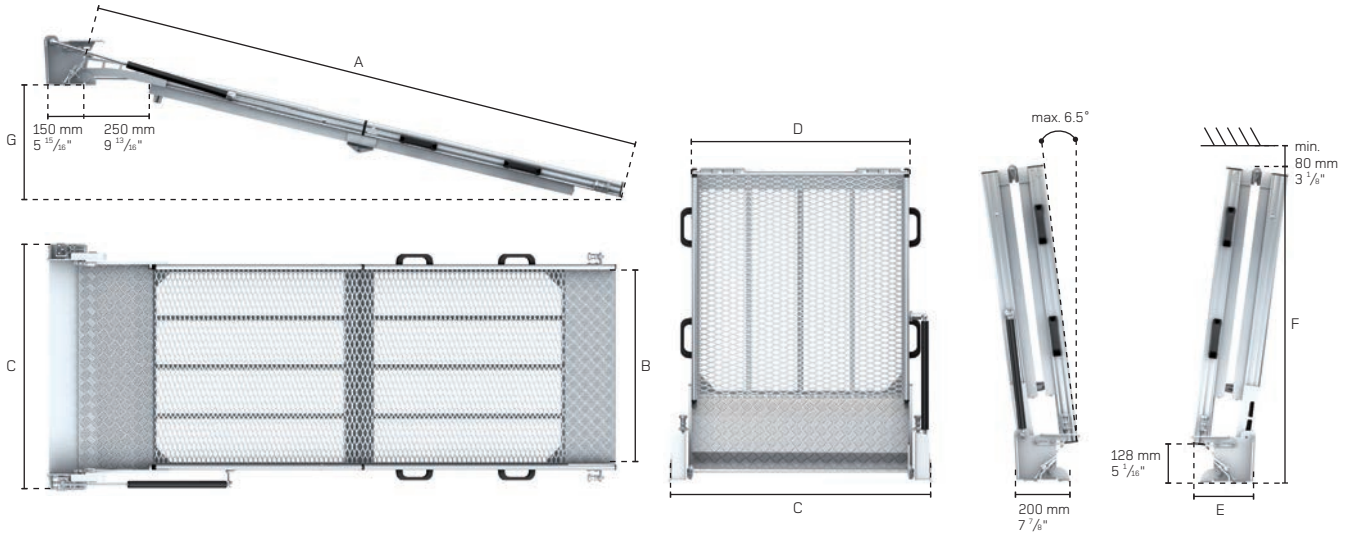

*suitable for cars with raised bumper

RA10 RAMPS		TECHNICAL SPECIFICATIONS															
Code	Description	Length A		Internal width B		Bottom width C		Top width D		Mounting depth E		Height folded F		Mounting height G min and max usable sloping angle *		Weight	
		mm	inch	mm	inch	mm	inch	mm	inch	mm	inch	mm	inch	mm	inch	kg	lbs
RA10-405x800	Folding - 2 pieces	2033	80.04	800	31.50	1005	39.57	840	33.07	255	10.04	1112	43.78	305 (11°) 550 (18°)	12.00 (11°) 21.65 (18°)	29	63.92
RA10-405x1000	Folding - 2 pieces	2033	80.04	1000	39.37	1205	47.44	1040	40.94	255	10.04	1112	43.78	305 (11°) 550 (18°)	12.00 (11°) 21.65 (18°)	36	79.35
RA10-450x600	Folding - 2 pieces	2253	88.70	600	23.62	805	31.69	640	25.20	255	10.04	1222	48.11	350 (11°) 600 (18°)	13.78 (11°) 23.62 (18°)	28	61.72
RA10-450x800	Folding - 2 pieces	2253	88.70	800	31.50	1005	39.57	840	33.07	255	10.04	1222	48.11	350 (11°) 600 (18°)	13.78 (11°) 23.62 (18°)	30	66.13
RA10-450x1000	Folding - 2 pieces	2253	88.70	1000	39.37	1205	47.44	1040	40.94	255	10.04	1222	48.11	350 (11°) 600 (18°)	13.78 (11°) 23.62 (18°)	37	81.56
RA10-550x600	Folding - 2 pieces	2754	108.43	600	23.62	815	32.09	640	25.20	255	10.04	1472	57.95	450 (11°) 750 (18°)	17.72 (11°) 29.53 (18°)	29	63.92
RA10-550x800	Folding - 2 pieces	2754	108.43	800	31.50	1005	39.57	840	33.07	255	10.04	1472	57.95	450 (11°) 750 (18°)	17.72 (11°) 29.53 (18°)	35	77.15
RA10-550x1000	Folding - 2 pieces	2754	108.43	1000	39.37	1205	47.44	1040	40.94	255	10.04	1472	57.95	450 (11°) 750 (18°)	17.72 (11°) 29.53 (18°)	38	83.76

* Foldable ramp can be installed in a wide range of vehicles. Contact one of our Design Centres for specific technical details.

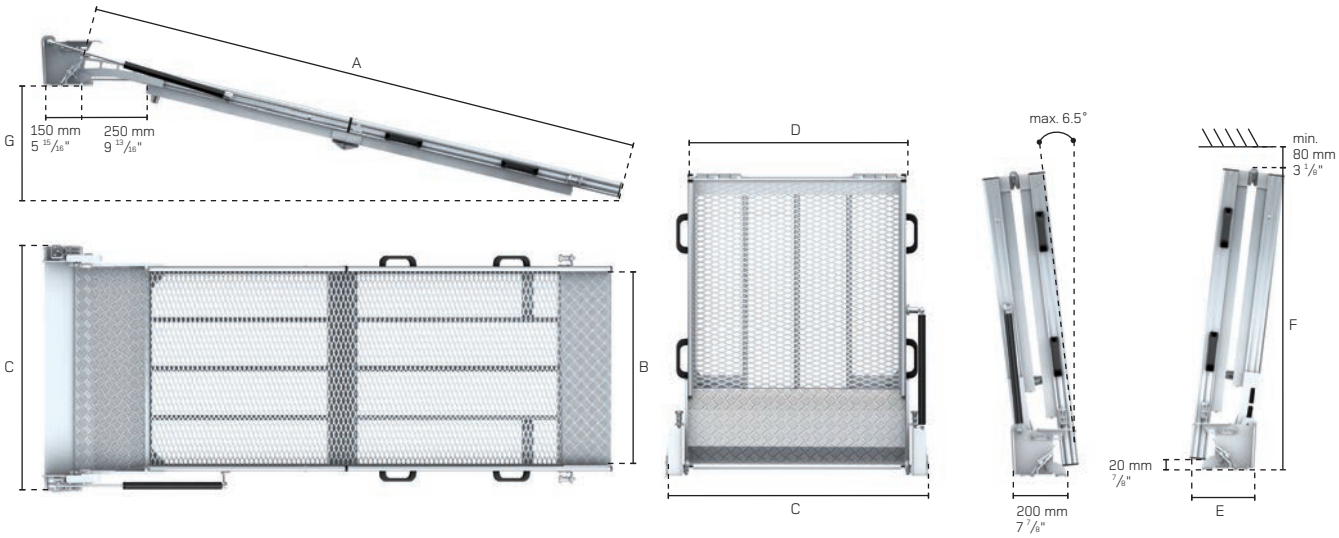

*suitable for cars with low bumpers

RA11 RAMPS		TECHNICAL SPECIFICATIONS															
Code	Description	Length A		Internal width B		Bottom width C		Top width D		Mounting depth E		Height folded F		Mounting height G min and max usable sloping angle *		Weight	
		mm	inch	mm	inch	mm	inch	mm	inch	mm	inch	mm	inch	mm	inch	kg	lbs
RA11-450x800	Folding - 2 pieces	2258	88.90	800	31.50	1005	39.57	840	33.07	255	10.04	1166	45.91	350 (11°) 600 (18°)	13.78 (11°) 23.62 (18°)	30	66.13
RA11-450x1000	Folding - 2 pieces	2258	88.90	1000	39.37	1205	47.44	1040	40.94	255	10.04	1166	45.91	350 (11°) 600 (18°)	13.78 (11°) 23.62 (18°)	37.5	82.66
RA11-550x800	Folding - 2 pieces	2760	108.66	800	31.50	1005	39.57	840	33.07	255	10.04	1423	56.02	450 (11°) 750 (18°)	17.72 (11°) 29.53 (18°)	35.5	78.25
RA11-550x1000	Folding - 2 pieces	2760	108.66	1000	39.37	1205	47.44	1040	40.94	255	10.04	1423	56.02	450 (11°) 750 (18°)	17.72 (11°) 29.53 (18°)	39	85.96

* Foldable ramp can be installed in a wide range of vehicles. Contact one of our Design Centres for specific technical details.

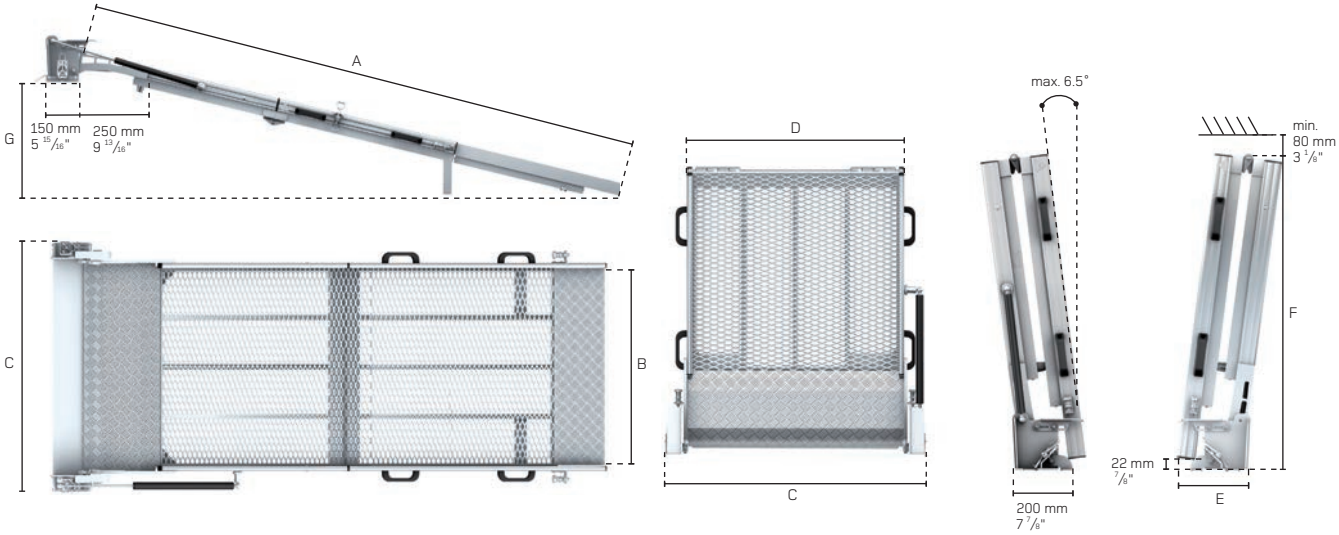

*suitable for cars with raised bumpers

RA12 RAMPS		TECHNICAL SPECIFICATIONS															
Code	Description	Length A		Internal width B		Bottom width C		Top width D		Mounting depth E		Height folded F		Mounting height G min and max usable sloping angle *		Weight	
		mm	inch	mm	inch	mm	inch	mm	inch	mm	inch	mm	inch	mm	inch	kg	lbs
RA12-450x800	Folding - 2 pieces	2158	84.96	800	31.50	1005	39.57	840	33.07	255	10.04	1117	43.98	350 (11°) 600 (18°)	13.78 (11°) 23.62 (18°)	30	66.13
RA12-450x1000	Folding - 2 pieces	2158	84.96	1000	39.37	1205	47.44	1040	40.94	255	10.04	1117	43.98	350 (11°) 600 (18°)	13.78 (11°) 23.62 (18°)	37	81.56
RA12-550x800	Folding - 2 pieces	2660	104.72	800	31.50	1005	39.57	840	33.07	255	10.04	1373	54.06	450 (11°) 750 (18°)	17.72 (11°) 29.53 (18°)	34	74.94
RA12-550x1000	Folding - 2 pieces	2660	104.72	1000	39.37	1205	47.44	1040	40.94	255	10.04	1373	54.06	450 (11°) 750 (18°)	17.72 (11°) 29.53 (18°)	38	83.76

* Foldable ramp can be installed in a wide range of vehicles. Contact one of our Design Centres for specific technical details.

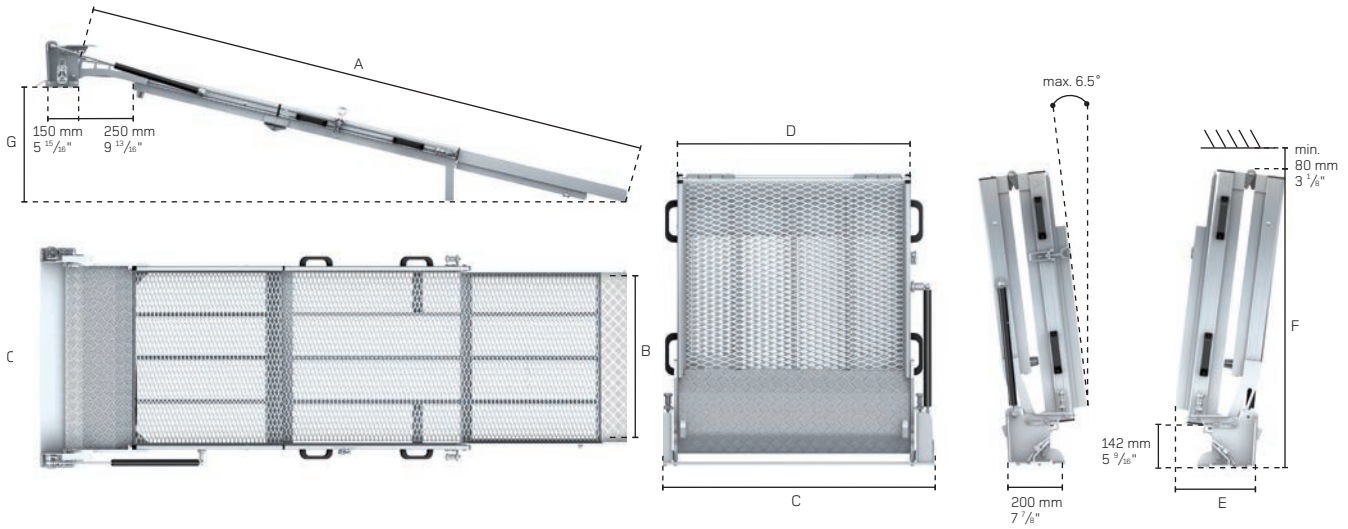

*suitable for cars with raised bumpers

RA20 RAMPS		TECHNICAL SPECIFICATIONS															
Code	Description	Length A		Internal width B		Bottom width C		Top width D		Mounting depth E		Height folded F		Mounting height G min and max usable sloping angle *		Weight	
		mm	inch	mm	inch	mm	inch	mm	inch	mm	inch	mm	inch	mm	inch	kg	lbs
RA20-550x800	Folding - 3 pieces	2750	108.27	800	31.50	1005	39.57	840	33.07	310	12.20	1052	41.42	450 (11°-13°) 700 (18°)	17.72 (11°-13°) 27.56 (18°)	36	79.35

* Foldable ramp can be installed in a wide range of vehicles. Contact one of our Design Centres for specific technical details.

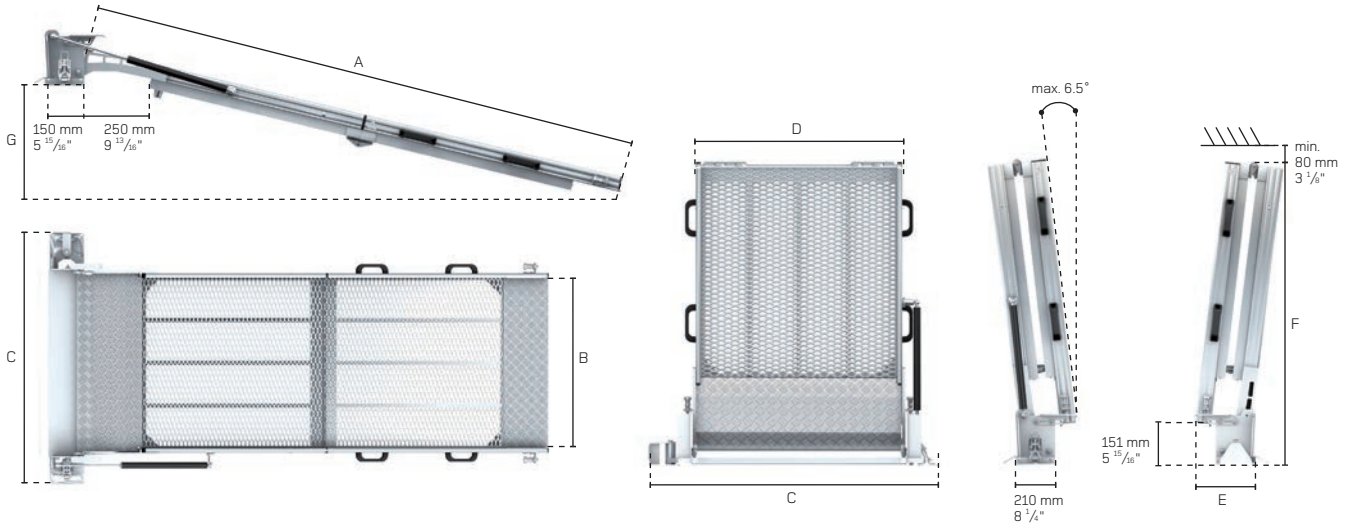

*suitable for cars with raised bumpers

RA30 RAMPS		TECHNICAL SPECIFICATIONS															
Code	Description	Length A		Internal width B		Bottom width C		Top width D		Mounting depth E		Height folded F		Mounting height G min and max usable sloping angle *		Weight	
		mm	inch	mm	inch	mm	inch	mm	inch	mm	inch	mm	inch	mm	inch	kg	lbs
RA30-450x800	Folding and swiveling - 2 pieces	2255	88.78	800	31.50	1180	46.46	840	33.07	306	12.05	1246	49.06	350 (11°) 600 (18°)	13.78 (11°) 23.62 (18°)	32	70.53
RA30-450x1000	Folding and swiveling - 2 pieces	2255	88.78	1000	39.37	1380	54.33	1040	40.94	306	12.05	1246	49.06	350 (11°) 600 (18°)	13.78 (11°) 23.62 (18°)	39	85.96

* Foldable ramp can be installed in a wide range of vehicles. Contact one of our Design Centres for specific technical details.

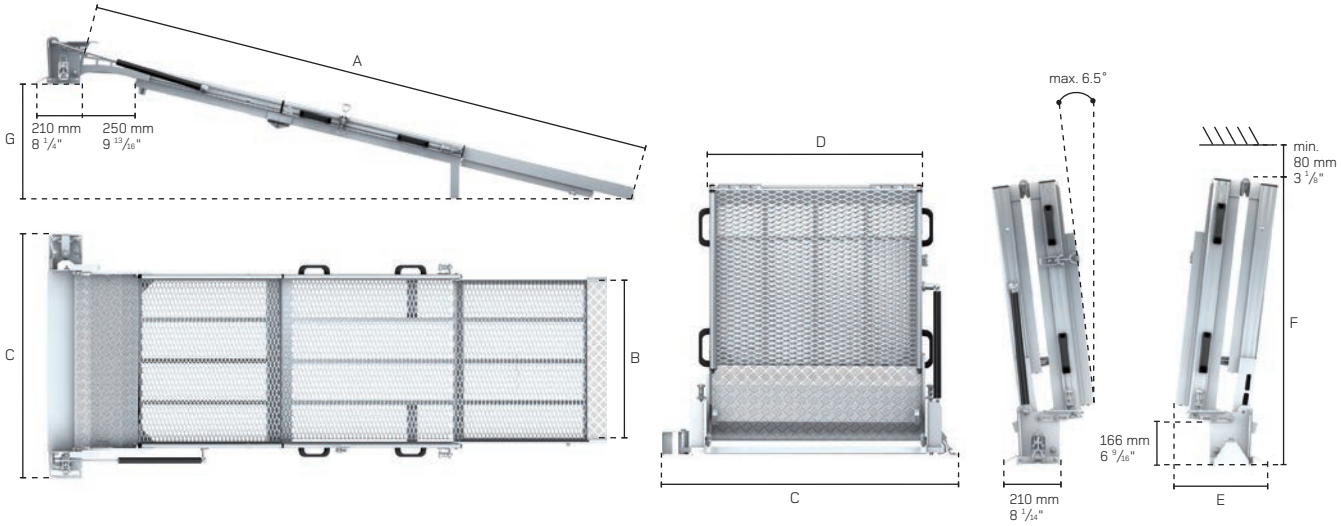

*suitable for cars with raised bumpers

RA40 RAMPS		TECHNICAL SPECIFICATIONS															
Code	Description	Length A		Internal width B		Bottom width C		Top width D		Mounting depth E		Height folded F		Mounting height G min and max usable sloping angle *		Weight	
		mm	inch	mm	inch	mm	inch	mm	inch	mm	inch	mm	inch	mm	inch	kg	lbs
RA40-550x800	Folding and swiveling - 3 pieces	2750	108.27	800	31.50	1180	46.46	840	33.07	355	13.98	1076	42.36	450 (11°-13°) 700 (18°)	17.72 (11°-13°) 27.56 (18°)	37	81.56
RA40-550x1000	Folding and swiveling - 3 pieces	2750	108.27	1000	39.37	1380	54.33	1040	40.94	355	13.98	1076	42.36	450 (11°-13°) 700 (18°)	17.72 (11°-13°) 27.56 (18°)	43	94.78

* Foldable ramp can be installed in a wide range of vehicles. Contact one of our Design Centres for specific technical details.

EXTENDABLE & REMOVABLE

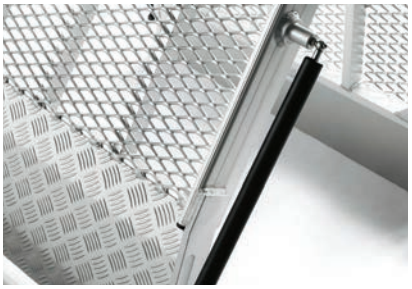

RA 10, 11, 12, RA 20, 30, 40	Gas piston
Series	For easy ramp handling and operation

RA 10, 11, 12, RA 20	Quick attach mechanism
Series	Allows mounting/demounting the ramp into/from the van´s floor

FOLDABLE

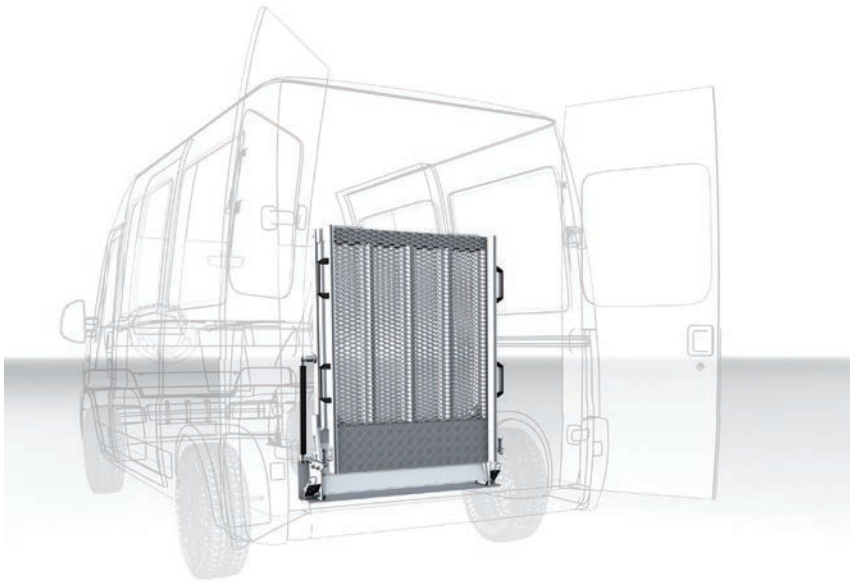

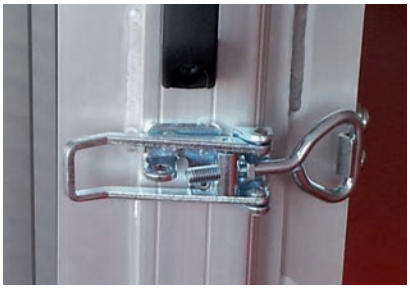

RA 20, 40	Lock for 3rd piece on RA20,40
Series	

RA 10, 11, 12, RA 20, 30, 40	Spring lock
Series	

SWIVELING

RA 30, 40	Swiveling mechanism
Series	Swiveling ramp platform for free access while ramp is still mounted inside

RA 10, 11, 12, 20	RA10 swivel adapter
Series	allows the ramp to swivel inside the car. Available for widths 600, 800, 1000mm.

Milos. Works better.

Up and down
RAM ramps for buildings

- Simple assembly
- Anodized
- Lightweight
- Loading capacity SWL 400kg (881.68 lbs)
- Width 900mm, 1200mm (35.43", 47.24")
- Anti slip open surface
- Protective 50 mm rim on sides

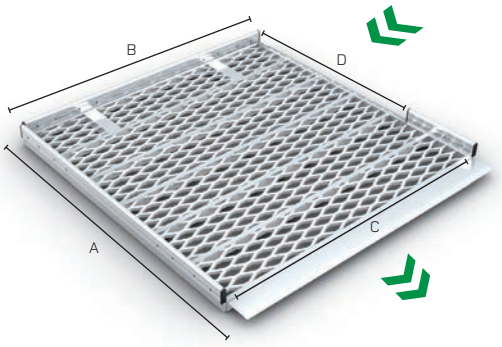

FLAT LANDING	90° left-turn end landing Used at the top end of the ramp set connectable directly to the building on the exit side, anodized surface									
Code	A		B		C		D		Weight	
	mm	inch	mm	inch	mm	inch	mm	inch	kg	lbs
RAM90-1250x1250 (90°)HL	1380	54.33"	1321	52.00"	1250	49.21"	920	36.22"	19.9	43.86

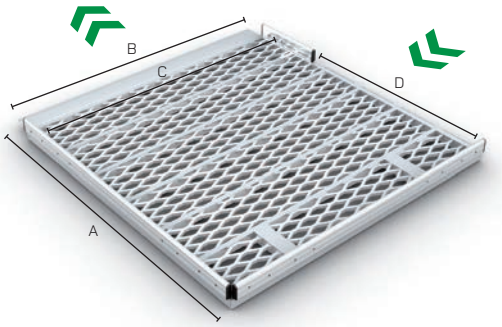

FLAT LANDING	90° right-turn end landing Used at the top end of the ramp set connectable directly to the building on the exit side, anodized surface									
Code	A		B		C		D		Weight	
	mm	inch	mm	inch	mm	inch	mm	inch	kg	lbs
RAM90-1250x1250 (90°)HP	1380	54.33"	1321	52.00"	1250	49.21"	920	36.22"	19.9	43.86

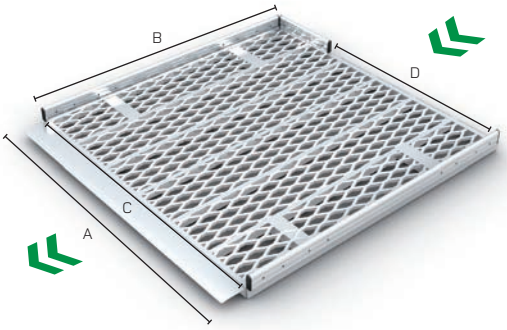

FLAT LANDING	180° straight end landing Used at the top part of the ramp, connects directly to the exit of the building, anodized surface									
Code	A		B		C		D		Weight	
	mm	inch	mm	inch	mm	inch	mm	inch	kg	lbs
RAM90-1250x1250H	1290	50.79"	1411	55.55"	1250	49.21"	920	36.22"	20	43.86

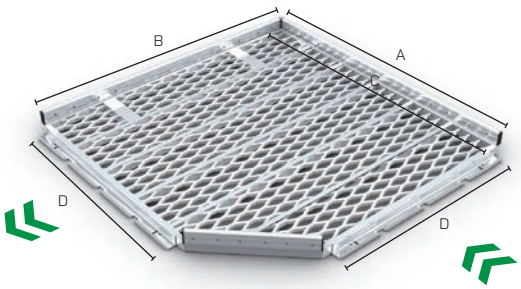

FLAT LANDING	90° turning landing Used to connect ramp from both sides, anodized surface									
Code	A		B		C		D		Weight	
	mm	inch	mm	inch	mm	inch	mm	inch	kg	lbs
RAM90-1250x1250 (90°)	1321	52.00"	1321	52.00"	1250	49.21"	920	36.22"	19.9	43.86

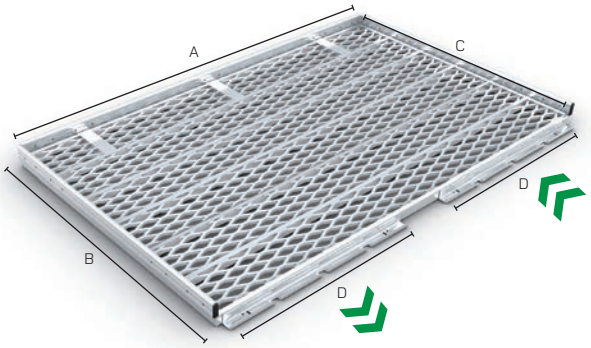

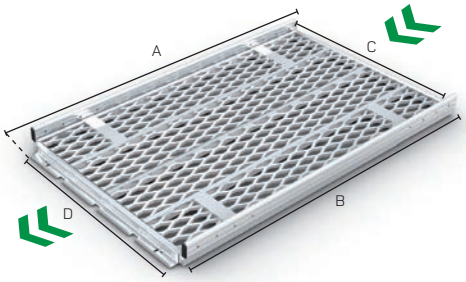

U-FLAT LANDING	180° U-shaped flat landing Used to connect ramp from both sides, in U-turn shape, anodized surface									
Code	A		B		C		D		Weight	
	mm	inch	mm	inch	mm	inch	mm	inch	kg	lbs
RAM90-2000x1250 (180°)	2040	80.31"	1321	52.00"	1250	49.21"	920	36.22"	29.4	64.80

2X1 FLAT LANDING	180° straight end landing Used to connect ramp from both sides, anodized surface									
Code	A		B		C		D		Weight	
	mm	inch	mm	inch	mm	inch	mm	inch	kg	lbs
RAM90-1500x900	1582	62.28"	1500	59.06"	900	35.43"	940	37.01"	18.7	41.22

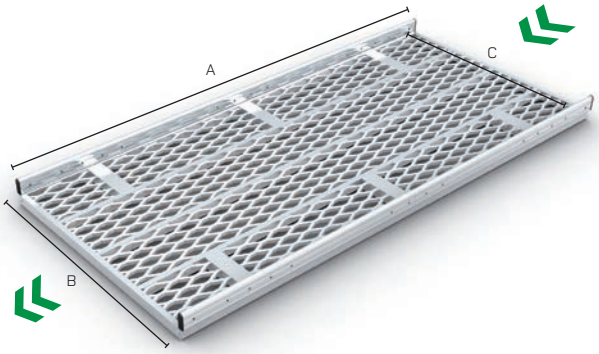

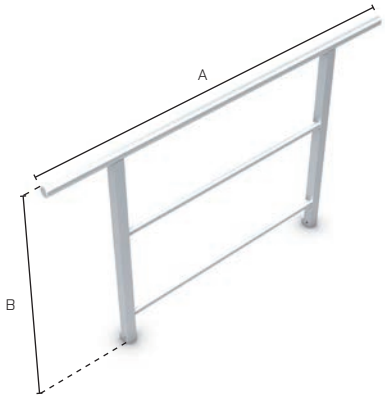

SLOPING RAMPS	180° straight ramp. To be used with a max. 6% angle (3.4°) Used to connect to another ramp or landing from both sides, anodized surface							
Code	A		B		C		Weight	
	mm	inch	mm	inch	mm	inch	kg	lbs
RAM90-500	500	19.69	940.0	37.01	900.0	35.43	6.2	13.67
RAM90-1000	1000	39.37	940.0	37.01	900.0	35.43	10.6	23.36
RAM90-1250	1250	49.21	940.0	37.01	900.0	35.43	12.8	28.21
RAM90-1500	1500	59.06	940.0	37.01	900.0	35.43	15.0	33.06
RAM90-2000	2000	78.74	940.0	37.01	900.0	35.43	19.8	43.64
RAM90-2500	2500	98.43	940.0	37.01	900.0	35.43	24.2	53.34
RAM90-3000	3000	118.11	940.0	37.01	900.0	35.43	28.6	63.04

GUARD RAILS	Guard rails that attach to any landing or ramp Connection material included, round endings of guard-rails available on request					
Code	A		B		Weight	
	mm	inch	mm	inch	kg	lbs
RAM-RAILING-350	350.0	13.78	900	35.43	3.1	6.83
RAM-RAILING-430	430.0	16.93	900	35.43	3.3	7.27
RAM-RAILING-500	500.0	19.69	900	35.43	3.8	8.38
RAM-RAILING-1000	1000.0	39.37	900	35.43	4.8	10.58
RAM-RAILING-1250	1250.0	49.21	900	35.43	5.1	11.15
RAM-RAILING-1500	1500.0	59.06	900	35.43	5.5	12.01
RAM-RAILING-2000	2000.0	78.74	900	35.43	6.5	14.33
RAM-RAILING-2500	2500.0	98.43	900	35.43	7.2	15.87
RAM-RAILING-2630	2630.0	103.54	900	35.43	7.4	16.31
RAM-RAILING-3000	3000.0	118.11	900	35.43	7.9	17.41

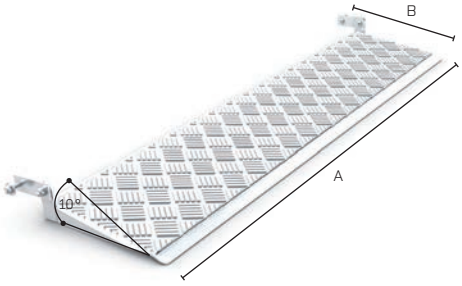

RAM RAIL CAP PART 180°	Guard rail cap – oval
Code	Weight 0.5 kg (1.10 lbs)

RAM90 –BOTTOM SECTION	Drive-on section for RAM sets with up to 10° angle, anodized metal sheet with anti-slip surface. Connection material included.					
Code	A		B		Weight	
	mm	inch	mm	inch	kg	lbs
RAM90-BP	900	35.43	265	10.43	2.47	5.44

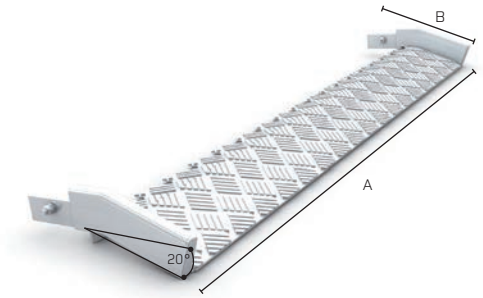

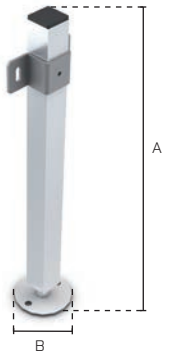

RAM90 –UPPER SECTION	Drive-off section for RAM sets with up to 20° angle anodized metal sheet with anti-slip surface.					
Code	A		B		Weight	
	mm	inch	mm	inch	kg	lbs
RAM90-UP	900	35.43	185.0	7.28	2.14	4.72

LEGS	40x40x2mm profile leg with antislip bolt with plastic cap. Adjustable. Connection material included. Anodized ; d=10cm foot with precise adjustment bolt.					
Code	A		B		Weight	
	mm	inch	mm	inch	kg	lbs
RAM-LEG-500	500	19.69	50.0	1.97	1.0	2.25
RAM-LEG-700	700	27.56	50.0	1.97	1.4	3.09
RAM-LEG-1000	1000	39.37	50.0	1.97	1.6	3.61
RAM-LEG-1200	1200	47.24	50.0	1.97	1.8	3.97
RAM-LEG-1500	1500	59.06	50.0	1.97	2.1	4.52
RAM-LEG-1700	1700	66.93	50.0	1.97	2.2	4.85

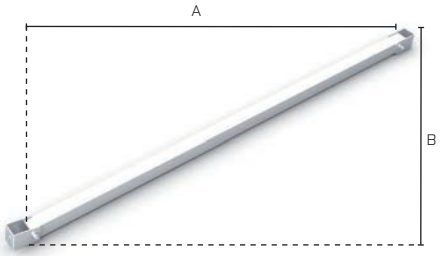

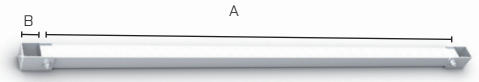

RAM90 – DIAGONAL BRACE	Diagonal brace with 2mm thick lugs for attachment to the leg profiles. Used for structural reinforcement of RAM sets over 500mm height.					
Code	A		B		Weight	
	mm	inch	mm	inch	kg	lbs
RAM-BRACE-900x600	936	36.85	600	23.62	1.4	3.09
RAM-BRACE-1500x900	1021	40.20	900	35.43	1.6	3.53
RAM-BRACE-1250x1100	1021	40.20	1100	43.31	1.7	3.75
RAM-BRACE-1500x300	1261	49.65	300	11.81	1.6	3.53
RAM-BRACE-2000x900	1751	68.94	900	35.43	2.1	4.63

RAM90 –BRACE	Straight brace with 2mm thick lugs for attachment to the leg profiles. Used for structural reinforcment of RAM sets over 500mm height.					
Code	A		B		Weight	
	mm	inch	mm	inch	kg	lbs
RAM-BRACE-900	936	36.85	42	1.65	1.3	2.87
RAM-BRACE-1250	1021	40.20	42	1.65	1.4	3.09
RAM-BRACE-1500	1261	49.65	42	1.65	1.6	3.53
RAM-BRACE-2000	1751	68.94	42	1.65	2.0	4.41

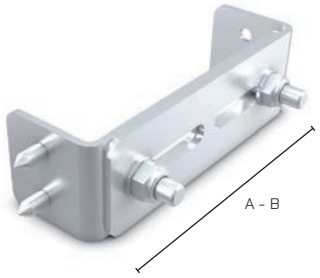

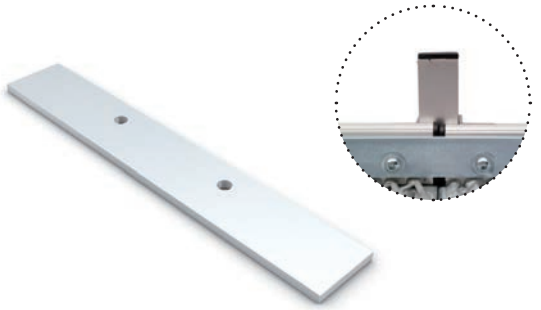

WALL ATTACHMENT	Wall attachment plate. Connection material to the RAM set included, pre-drilled d=6.5mm holes for wall anchors or bolts.					
Code	A		B		Weight	
	mm	inch	mm	inch	kg	lbs
RAM90WALL	126	4.96	193	7.59	0.3	0.66

CONNECTOR	For connecting two straight ramps.
Code	
RAM-CONN	Weight 0.25 kg (0.55 lbs)

• Milos RAM systems follow recommendations according to DIN 18040-1 (Requirements for wheelchair access in publically accessible buildings • RAM90 sloping ramps must be followed with a flat landing (minimum length of 1.5m) after every 6 meters of sloped ramp (with max. 6% of inclination) • Contact our R&D Department for more information or consultations

ITEMS TO BUILD STRUCTURE BELOW

1	RAM90-2500	2 pieces
2	RAM90-1250x1250 (90°)	1 piece
3	RAM90-1250x1250 (90°) HP	1 piece
4	RAM90-BP	1 piece
5	RAM-RAILING-2500	4 pieces
6	RAM-RAILING-1250	4 pieces
7	RAM-RAILING-350	1 piece
8	RAM-LEG-350	5 pieces
9	RAM-LEG-750	5 pieces

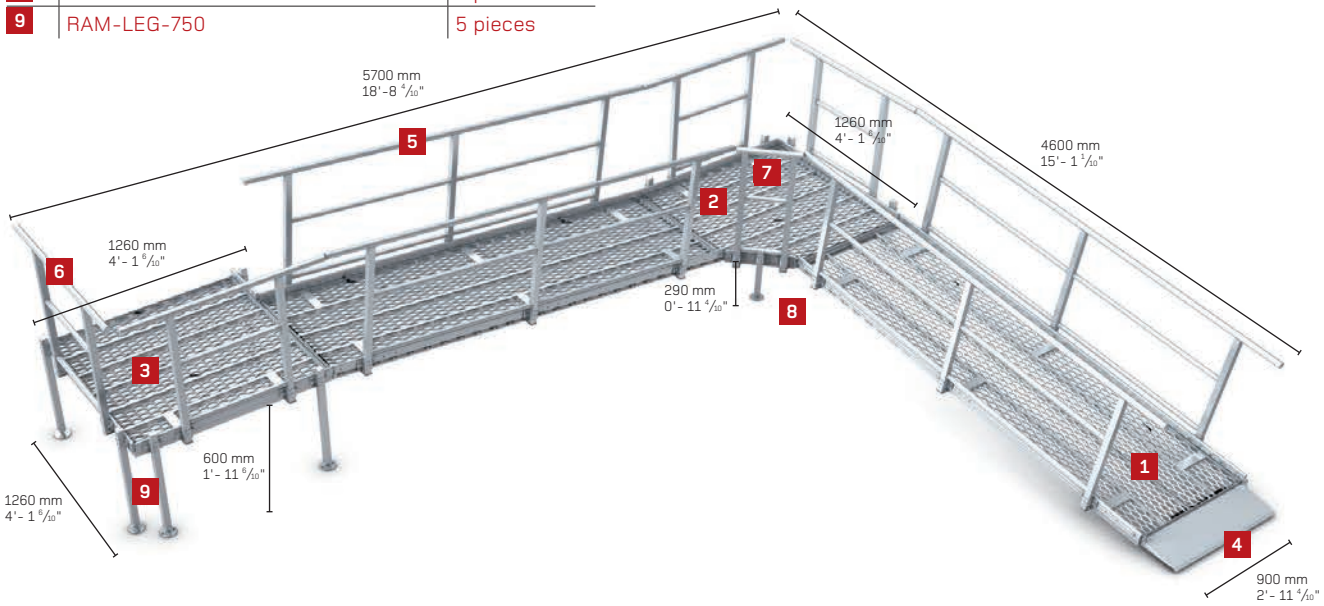

ITEMS TO BUILD STRUCTURE BELOW

1	RAM90-2500	3 pieces
2	RAM90-2000x1250 (180°)	1 piece
3	RAM90-1250x1250 (90°) HL	1 piece
4	RAM90-BP	1 piece
5	RAM RAIL ENDING PART	2 pieces
6	RAM-RAILING-2500	6 pieces
7	RAM-RAILING-1250	4 piece
8	RAM-RAILING-2000	1 piece
9	RAM-LEG-500	2 pieces
10	RAM-LEG-700	7 pieces
11	RAM-LEG-1000	5 pieces
12	RAM-BRACE-1250	2 pieces
13	RAM-BRACE-1250x300	2 pieces
14	RAM-BRACE-1250x600	2 pieces
15	RAM-BRACE-2000	1 piece
16	RAM-BRACE-2000x300	1 piece

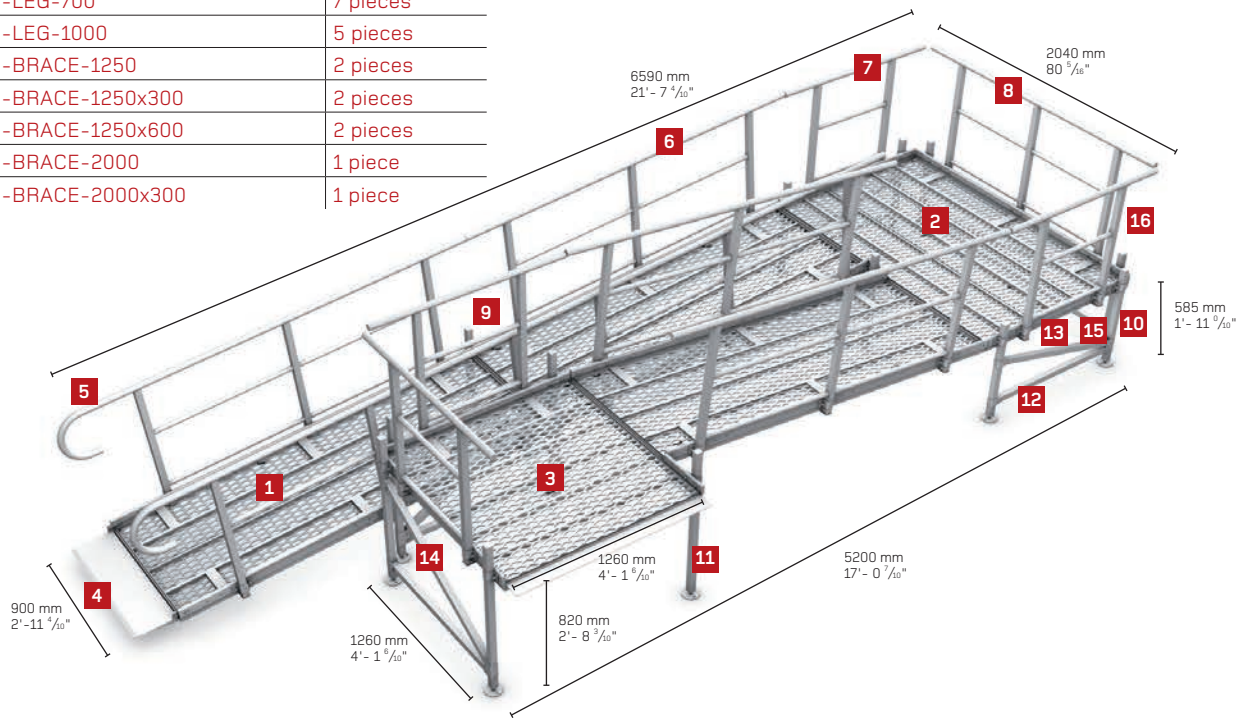

Drive up the truck
OV50 light ramps

- Lightweight profile made of EN AW-6063 T6
- Raised side rails as standard
- Anti-slip surface
- Loading capacity up to 1950 kg (4290 lbs)
- Length up to 5000mm (196.85")
- Wide selection of sizes
- Ultra heavy duty use
- Ideal for concert touring

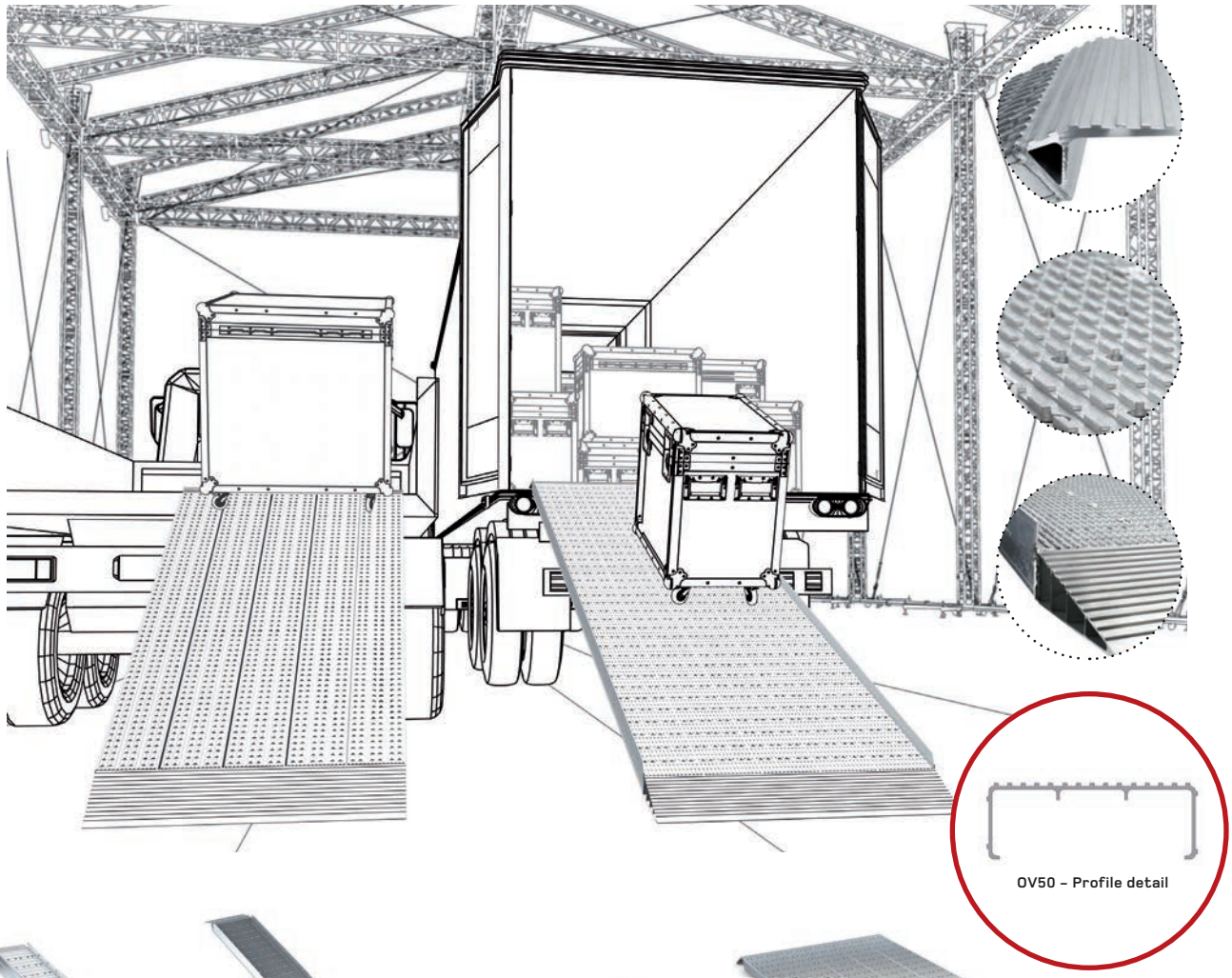

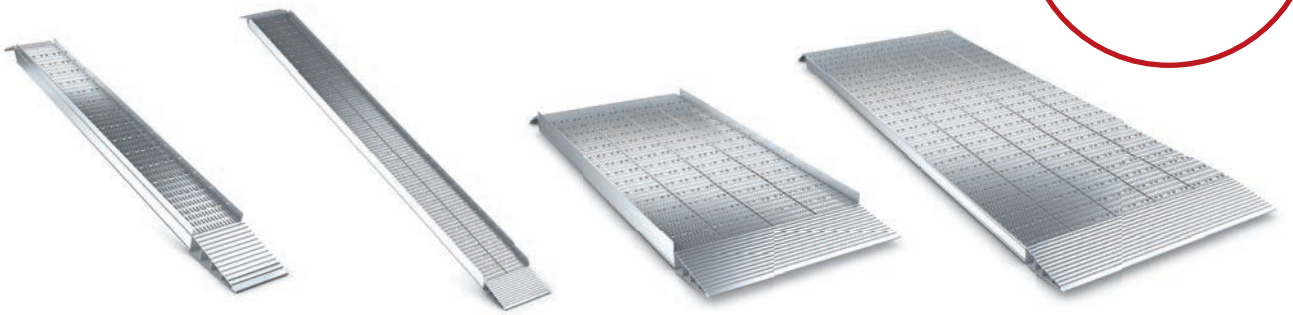

OV50	**Light loading ramps**
Series	Available in 200 - 400 - 600 - 800 - 1000mm (7.87 - 15.75 - 23.62 - 31.50 - 39.37"). Side railing height 45mm (1.77")

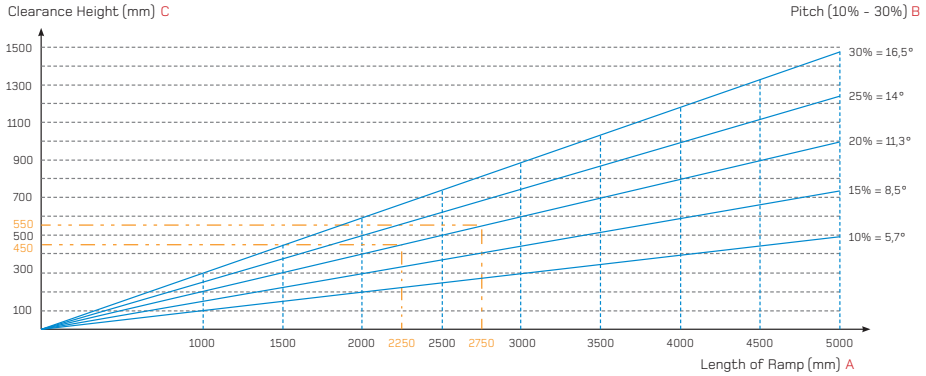

$$\text{Length of Ramp (mm) A} = \frac{\text{Clearance Height (mm) C}}{\text{Pitch (10\% - 30\%) B}} \times 100$$

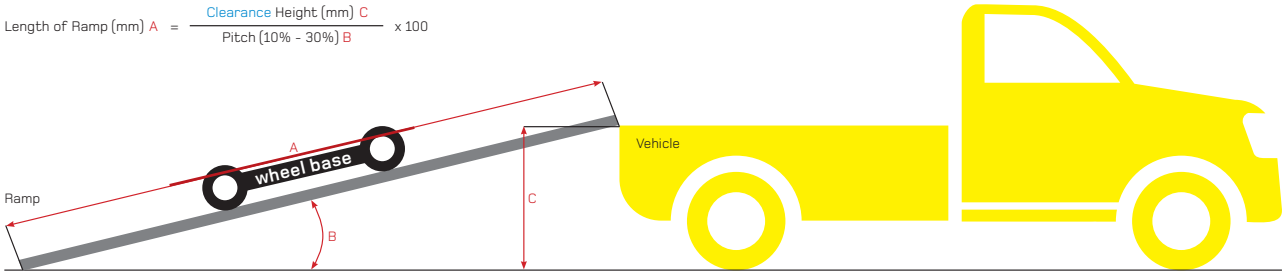

OV50	TECHNICAL SPECIFICATIONS									
Code	Length		Width		Height		SWL per piece *		Weight per piece	
	mm	in	mm	in	mm	in	kg	lbs	kg	lbs
OV50-200x1500	1500	59.06	200	7.87	450	17.72	820.00	1804.00	6.00	13.20
OV50-200x2000	2000	78.74	200	7.87	600	23.62	660.00	1452.00	8.00	17.60
OV50-200x2500	2500	98.43	200	7.87	750	29.53	530.00	1166.00	9.00	19.80
OV50-200x3000	3000	118.11	200	7.87	900	35.43	440.00	968.00	11.00	24.20
OV50-200x3500	3500	137.80	200	7.87	1050	41.34	380.00	836.00	13.00	28.60
OV50-200x4000	4000	157.48	200	7.87	1200	47.24	330.00	726.00	14.00	30.80
OV50-400x1500	1500	59.06	400	15.75	450	17.72	1780.00	3916.00	12.00	26.40
OV50-400x2000	2000	78.74	400	15.75	600	23.62	1450.00	3190.00	15.00	33.00
OV50-400x2500	2500	98.43	400	15.75	750	29.53	1200.00	2640.00	18.00	39.60
OV50-400x3000	3000	118.11	400	15.75	900	35.43	1000.00	2200.00	22.00	48.40
OV50-400x3500	3500	137.80	400	15.75	1050	41.34	860.00	1892.00	25.00	55.00
OV50-400x4000	4000	157.48	400	15.75	1200	47.24	750.00	1650.00	28.00	61.60
OV50-400x4500	4500	177.17	400	15.75	1350	53.15	670.00	1474.00	31.00	68.20
OV50-400x5000	5000	196.85	400	15.75	1500	59.06	600.00	1320.00	35.00	77.00
OV50-600x1500	1500	59.05	600	23.62	450	17.71	1800.00	3960.00	19.00	41.80
OV50-600x2000	2000	78.74	600	23.62	600	23.62	1490.00	3278.00	24.00	52.80
OV50-600x2500	2500	98.42	600	23.62	750	29.52	1260.00	2772.00	29.00	63.80
OV50-600x3000	3000	118.11	600	23.62	900	35.43	1080.00	2376.00	34.00	74.80
OV50-600x3500	3500	137.79	600	23.62	1050	41.33	930.00	2046.00	40.00	88.00
OV50-600x4000	4000	157.48	600	23.62	1200	47.24	810.00	1782.00	45.00	99.00
OV50-600x4500	4500	177.16	600	23.62	1350	53.14	730.00	1606.00	50.00	110.00
OV50-600x5000	5000	196.85	600	23.62	1500	59.05	690.00	1518.00	56.00	123.20
OV50-800x1500	1500	59.06	800	31.50	450	17.72	1950.00	4290.00	23.00	50.60
OV50-800x2000	2000	78.74	800	31.50	600	23.62	1700.00	3740.00	30.00	66.00
OV50-800x2500	2500	98.43	800	31.50	750	29.53	1450.00	3190.00	36.00	79.20
OV50-800x3000	3000	118.11	800	31.50	900	35.43	1250.00	2750.00	43.00	94.60
OV50-800x3500	3500	137.80	800	31.50	1050	41.34	1070.00	2354.00	50.00	110.00
OV50-800x4000	4000	157.48	800	31.50	1200	47.24	940.00	2068.00	56.00	123.20
OV50-800x4500	4500	177.17	800	31.50	1350	53.15	835.00	1837.00	63.00	138.60
OV50-800x5000	5000	196.85	800	31.50	1500	59.06	800.00	1760.00	69.00	151.80
OV50-1000x1500	1500	59.06	1000	39.37	450	17.72	1950.00	4290.00	29.00	63.80
OV50-1000x2000	2000	78.74	1000	39.37	600	23.62	1700.00	3740.00	37.00	81.40
OV50-1000x2500	2500	98.43	1000	39.37	750	29.53	1450.00	3190.00	45.00	99.00
OV50-1000x3000	3000	118.11	1000	39.37	900	35.43	1250.00	2750.00	53.00	116.60
OV50-1000x3500	3500	137.80	1000	39.37	1050	41.34	1070.00	2354.00	62.00	136.40
OV50-1000x4000	4000	157.48	1000	39.37	1200	47.24	940.00	2068.00	70.00	154.00
OV50-1000x4500	4500	177.17	1000	39.37	1350	53.15	835.00	1837.00	78.00	171.60
OV50-1000x5000	5000	196.85	1000	39.37	1500	59.06	800.00	1760.00	86.00	189.20

*SWL counted for 1250 mm wheelbase

Drive up the truck

OV100 ramps

- Easy handling and manipulation
- Anti-slip surface
- Length up to 4000mm (157.5")
- Robust EN-AW 6063 T6 aluminium profile
- Industrial, commercial and automotive use
- Wide selection of sizes
- Optional side rails available

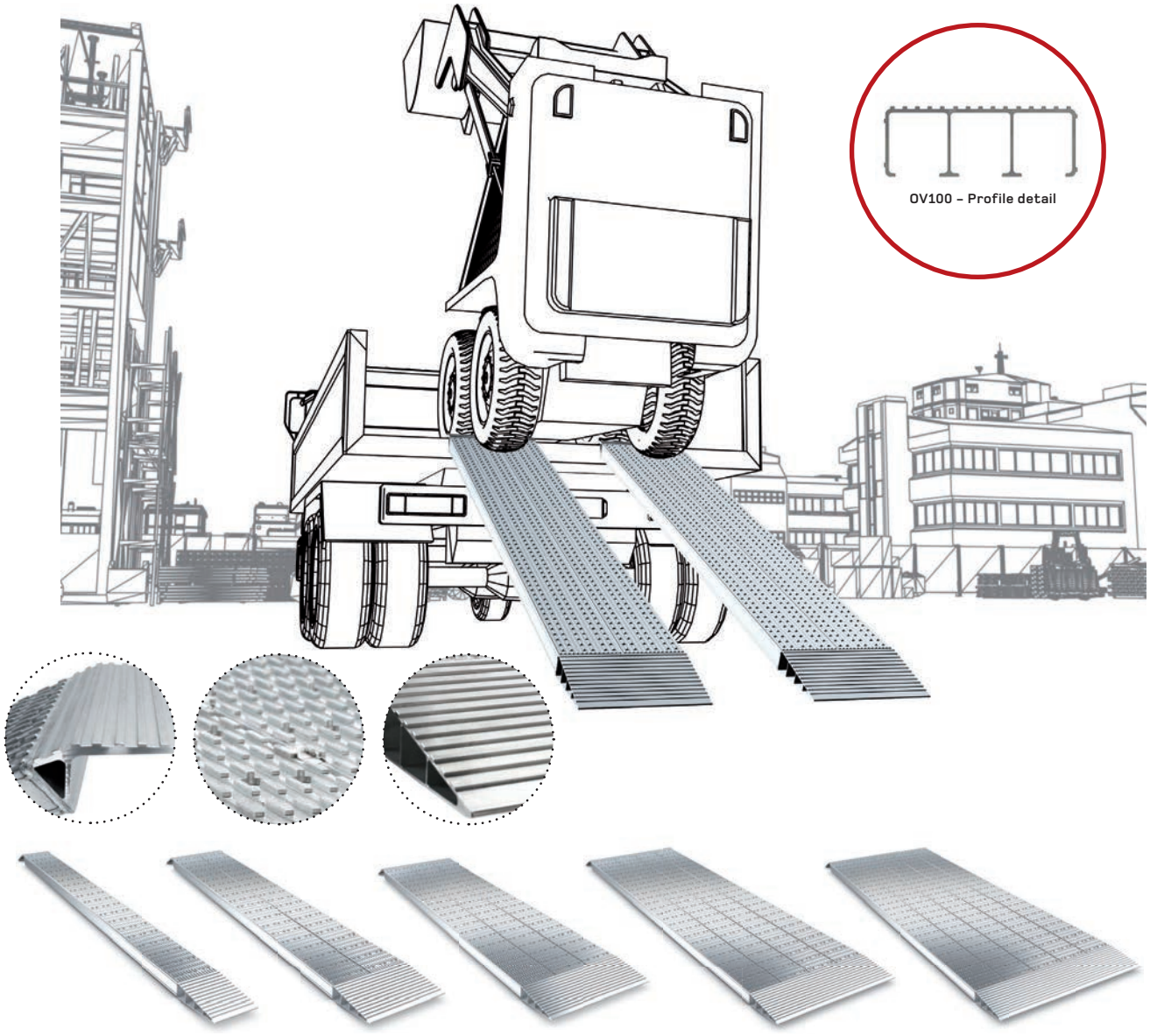

OV100	**Heavy loading ramps**
Series	Available in 200 - 400 - 600 - 800 - 1000mm (7.87 - 15.75 - 23.62 - 31.50 - 39.37´´).

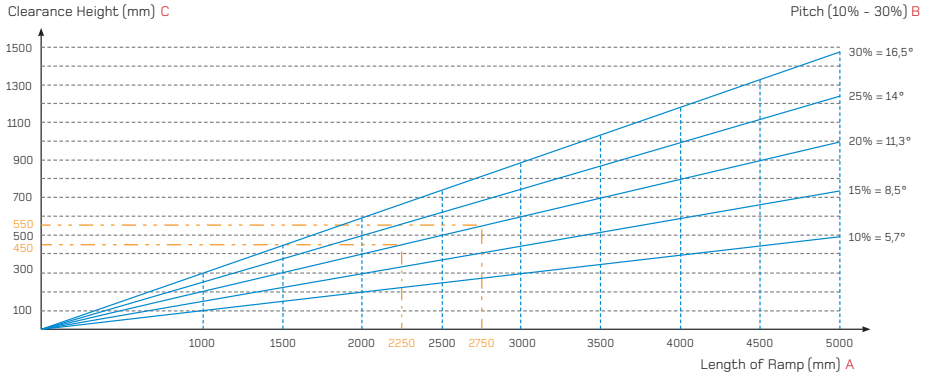

$$\text{Length of Ramp (mm) A} = \frac{\text{Clearance Height (mm) C}}{\text{Pitch (10\% - 30\%) B}} \times 100$$

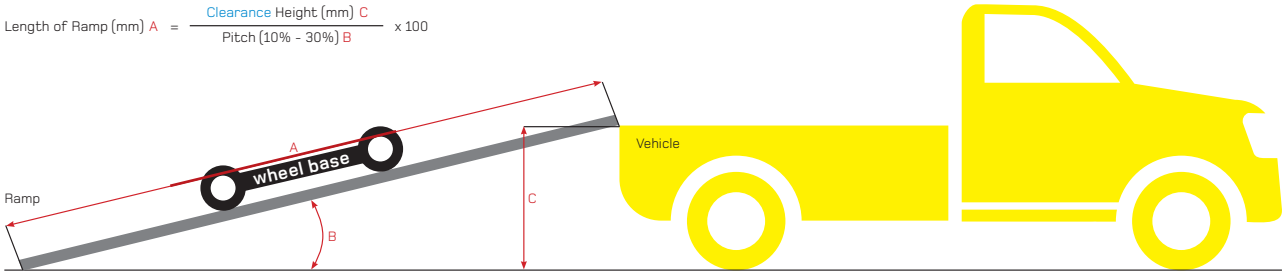

OV100 LOADING RAMP									TECHNICAL SPECIFICATIONS	
Code	Length		Width		Height		SWL per piece *		Weight per piece	
	mm	in	mm	in	mm	in	kg	lbs	kg	lbs
OV100-200x1500	1500	59.06	200	7.87	450	17.72	855.00	1881.00	7.00	15.40
OV100-200x2000	2000	78.74	200	7.87	600	23.62	720.00	1584.00	10.00	22
OV100-200x2500	2500	98.43	200	7.87	750	29.53	655.00	1441.00	12.00	26.40
OV100-200x3000	3000	118.11	200	7.87	900	35.43	590.00	1298.00	14.00	30.80
OV100-200x3500	3500	137.80	200	7.87	1050	41.34	485.00	1067.00	16.00	35.20
OV100-200x4000	4000	157.48	200	7.87	1200	47.24	410.00	902.00	18.00	39.60
OV100-400x1500	1500	59.06	400	15.75	450	17.72	1790.00	3938.00	14.00	30.80
OV100-400x2000	2000	78.74	400	15.75	600	23.62	1470.00	3234.00	19.00	41.80
OV100-400x2500	2500	98.43	400	15.75	750	29.53	1220.00	2684.00	23.00	50.60
OV100-400x3000	3000	118.11	400	15.75	900	35.43	1120.00	2464.00	27.00	59.40
OV100-400x3500	3500	137.80	400	15.75	1050	41.34	980.00	2156.00	32.00	70.40
OV100-400x4000	4000	157.48	400	15.75	1200	47.24	825.00	1815.00	36.00	79.20
OV100-600x1500	1500	59.06	600	23.62	450	17.72	1890.00	4158.00	21.00	46.20
OV100-600x2000	2000	78.74	600	23.62	600	23.62	1660.00	3652.00	28.00	61.60
OV100-600x2500	2500	98.43	600	23.62	750	29.53	1500.00	3300.00	34.00	74.80
OV100-600x3000	3000	118.11	600	23.62	900	35.43	1415.00	3113.00	41.00	90.20
OV100-800x1500	1500	59.06	800	31.50	450	17.72	1990.00	4378.00	28.00	61.60
OV100-800x2000	2000	78.74	800	31.50	600	23.62	1750.00	3850.00	37.00	81.40
OV100-800x2500	2500	98.43	800	31.50	750	29.53	1500.00	3300.00	46.00	101.20
OV100-800x3000	3000	118.11	800	31.50	900	35.43	1415.00	3113.00	55.00	121.00
OV100-1000x1500	1500	59.06	1000	39.37	450	17.72	1990.00	4378.00	35.00	77.00
OV100-1000x2000	2000	78.74	1000	39.37	600	23.62	1750.00	3850.00	46.00	101.20
OV100-1000x2500	2500	98.43	1000	39.37	750	29.53	1500.00	3300.00	57.00	125.40
OV100-1000x3000	3000	118.11	1000	39.37	900	35.43	1415.00	3113.00	68.00	149.60

*SWL counted for 1000 mm wheelbase

Drive up the truck
OV110 foldable ramps

- Convenient folding mechanism
- Anti-slip surface
- Loading capacity up to 725 kg (1595 lbs)
- Robust EN-AW 6063 T6 aluminium profile
- Length up to 3000mm (118.11")
- Wide selection of sizes
- Ideal for concert touring
- Optional side rails available

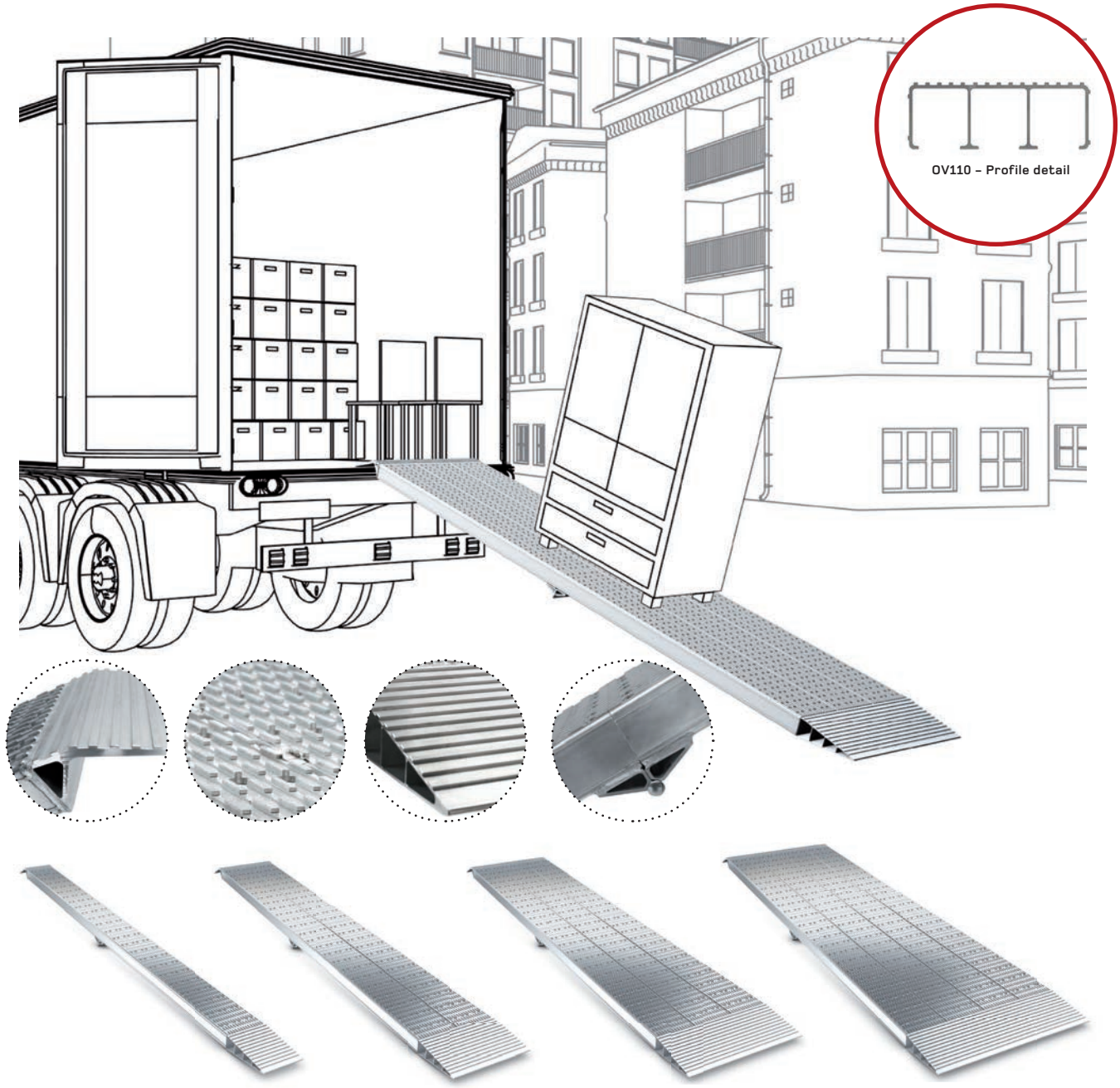

OV110	**Foldable loading ramps**
Series	Available in 200 - 400 - 600 - 800mm (7.87 - 15.75 - 23.62 - 31.50´´).

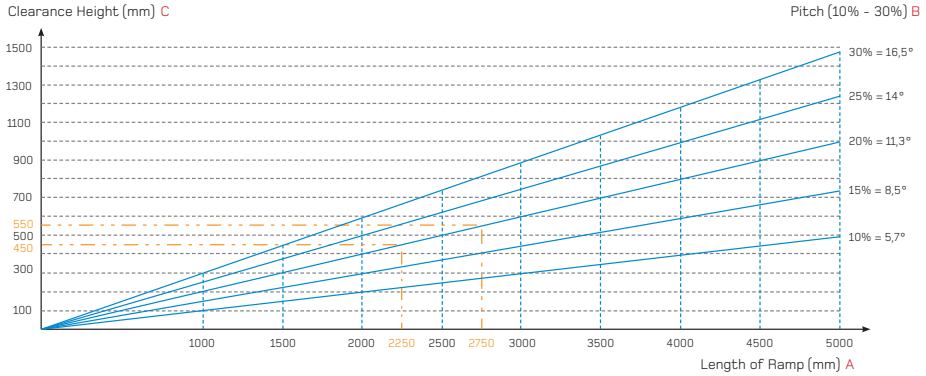

$$\text{Length of Ramp (mm) A} = \frac{\text{Clearance Height (mm) C}}{\text{Pitch (10\% - 30\%) B}} \times 100$$

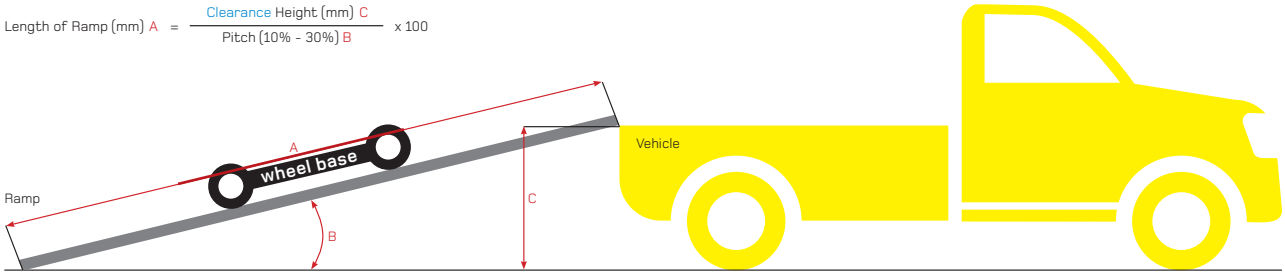

OV110 FOLDABLE LOADING RAMP							TECHNICAL SPECIFICATIONS			
Code	Length		Width		Height		SWL per piece *		Weight per ramp	
	mm	in	mm	in	mm	in	kg	lbs	kg	lbs
OV110-200x2000	2000	78.74	200	7.87	600	23.62	333.50	733.70	10.00	22
OV110-200x2500	2500	98.43	200	7.87	750	29.53	266.50	586.30	12.00	26.40
OV110-200x3000	3000	118.11	200	7.87	900	35.43	200	440.00	14.00	30.80
OV110-400x2000	2000	78.74	400	15.75	600	23.62	650	1430.00	20.00	44
OV110-400x2500	2500	98.43	400	15.75	750	29.53	500	1100.00	24.00	52.80
OV110-400x3000	3000	118.11	400	15.75	900	35.43	400	880.00	29.00	63.80
OV110-600x2000	2000	78.74	600	23.62	600	23.62	725	1595.50	30.00	66
OV110-600x2500	2500	98.43	600	23.62	750	29.53	675	1485.00	36.00	79.20
OV110-600x3000	3000	118.11	600	23.62	900	35.43	600	1320.00	43.00	94.60
OV110-800x2000	2000	78.74	800	31.50	600	23.62	725	1595.50	40.00	88.00
OV110-800x2500	2500	98.43	800	31.50	750	29.53	675	1485.00	49.00	107.80
OV110-800x3000	3000	118.11	800	31.50	900	35.43	600	1320.00	57.00	125.40

*SWL counted for 1000 mm wheelbase

MILOS s.r.o.

Špindlerova 286
413 01 Roudnice nad Labem
Czech Republic

Tel +420 416 810 800
info@milos.cz

MILOS (Guangzhou) Co, Ltd

House No. 1-3, 6 Gong-Ye Road
Da-Wen Cun
Dong-Chong Zhen
Nansha District, Guangzhou

Tel +86 203 490 0968
info@milos.cn

Area Four Industries HQ
Czech Republic

Špindlerova 286
41301 Roudnice nad Labem
Czech Republic

T +420 416 810 800
contactus@areafourindustries.com

Area Four Industries
Germany

Johann-Krane-Weg 27
48149 Münster
Germany

T +49 251 202 4014-0
info@areafourindustries.de

Area Four Industries
United Kingdom

Unit 5-6 Beechwood Estate
Cattle Dyke, Gorefield, Wisbech
Cambridgeshire PE13 4NR
United Kingdom

T +44 (0)1945 410 700
info@areafourindustries.co.uk

Area Four Industries
America

5427 N. National Dr.
Knoxville, TN 37914
USA

T +1 800 411 0065
info@areafourindustries.us